SUPERBOLT™

MULTI-JACKBOLT TENSIONERS

Product Overview

BEE4
EMPOWERING SUPPLIER

ISO 9001	Certified
ISO 14001	Certified
ISO 45001	Certified

TABLE OF CONTENTS

INDEX

SUPERBOLT Solutions	1-2
SUPERBOLT Advantages	3-4
Chains and Chain Slings	5-6
SUPERBOLT Manufacturing	7
Part Names	8
MT SUPERBOLT Nut-Style Tensioner, Standard	9
CY SUPERBOLT Nut-Style Tensioner, High Strength	10
H650 SUPERBOLT Nut-Style Tensioner for Medium Temperatures	11
H650 SUPERBOLT Nut-Style Tensioner for Medium Temperatures, Tall	12
SJ SUPERBOLT Nut-Style Tensioner, Compact	13
Tensioners and Flexnuts	14
SB8 SUPERBOLT Bolt-Style Tensioner, Standard	15
SB8 SUPERBOLT Bolt-Style Tensioner, High Strength	16
SX8 SUPERBOLT Flexnut, Standard	17
SX12 SUPERBOLT Flexnut, High Strength	18
Installation - Joint Design	19
Bolting Solutions	20-22
Helpful Tips	23

Tensioners

Superbolt tensioners are designed as replacements for conventional nuts and bolts. These devices can be threaded onto a new or existing bolt, stud, threaded rod or shaft. The main thread serves to position the tensioner on the bolt or stud, against the hardened washer and the load bearing surface. Once it is positioned, actual tensioning of the bolt or stud is accomplished by using simple hand tools to torque the jackbolts, which encircle the main thread. The jackbolts transfer the preload evenly into the main thread and, consequently, onto the joint. The main thread is tightened through pure tension.

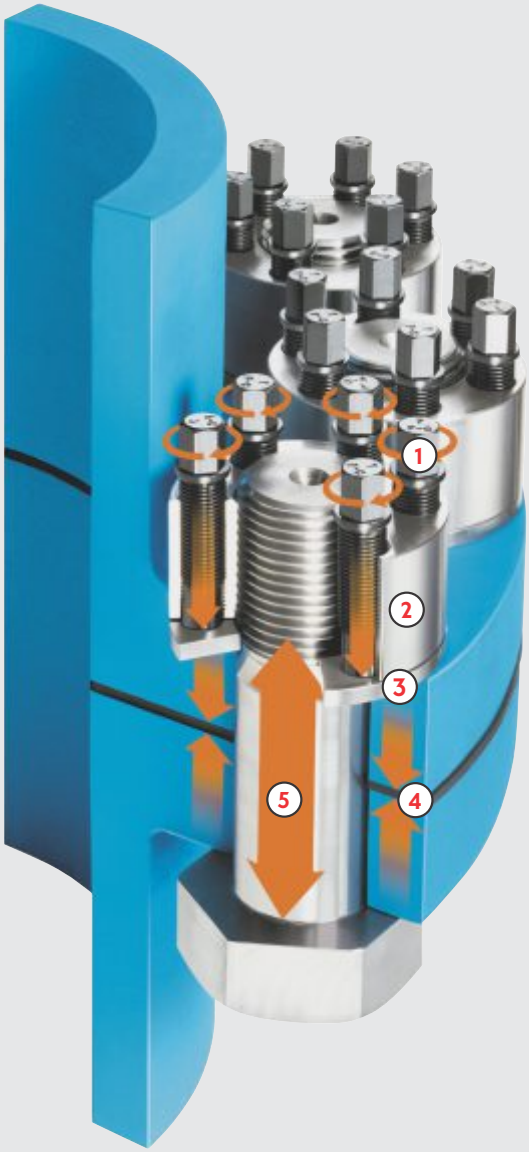

Tightening Tensioners

- By tightening the jackbolts, a strong thrust (axial) force is generated. The thrust force is directed against a hardened washer. Jackbolts have a small friction diameter and can therefore create a high thrust force with relatively little torque input (1).
- The loads are transferred through the nut body, which is positioned on the main thread by hand (2).
- A hardened washer is used to transfer the force while protecting the flange face (3).
- The thrust (axial) force of many jackbolts and the opposite reaction force of the main bolt head, create a strong clamping force on the flange (4).
- The thrust (axial) force from the jackbolt creates an equally strong reaction force in the main bolt (5).

Proven and Certified

The product types in the wide range of multi-jackbolt tensioners have been tested and approved by several certification institutes. Some of the product series have also achieved design and type approvals for production. Below are some examples:

- DNV (Det Norske Veritas)
- GL (Germanischer Lloyd)
- Siemens system audit

The high level of experience BMG has in pre-engineered products for specific challenges, allows us to supply certification for certain ranges on request. For example:

- TÜV
- Lloyd's Register
- Vinçotte

For more detailed information on certificates / approvals for a specific product or production site, please contact BMG's Fasteners department.

PLEASE NOTE: Certificates you require should be requested prior to ordering, in order to ensure compliance with your needs.

Proven in the Field

Superbolt Tensioners are used in many Industries:

Hydropower, wind turbines, gas & steam turbines, nuclear, steel, mining, shipbuilding, offshore, chemical and transportation industries.

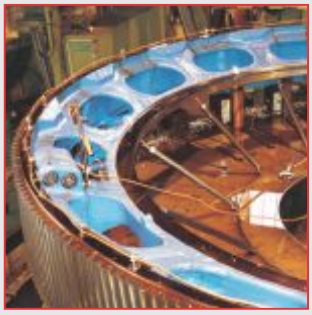

SUPERBOLT ADVANTAGES

Design

BMG can assist you in determining the dimensions and load conditions of your bolted joints, evaluate your current tightening method and calculate the bolt preloads necessary for reliability and durability. OEM's all over the world use multi-jackbolt tensioners in their design in order to improve the performance of their product.

Advantages:

- **Higher Preload** - Tightening in pure tension allows higher preloads on the same bolt size versus other tightening methods.
- **Proper Bolted Joint** - Generating preloads higher than the separating forces, means your bolting will not vibrate loose on properly designed joints. This can eliminate costly downtime.
- **Elasticity** - Added elasticity increases the fatigue-life of the bolted joint.
- **Design Options** - High preload capacity and accuracy allows for the design of smaller bolt sizes. Compact dimensions and the reduction of tool sizes, allows for a reduction in the size of machinery, reducing material and machining cost.

Installation

A mechanical advantage of using SUPERBOLT products means that only simple hand tools are needed to tighten any size bolt or stud.

Advantages:

- **Hand Tools Only** - Ordinary hand wrenches or pneumatic wrenches are the only tools needed to generate immense bolt stresses.
- **Increased Safety** - Installations are safe as only small hand tools are needed. There are no safety hazards caused by immense hydraulic pressures, pinching hazards, heavy lifting of large tools or sockets breaking under high pressure.
- **Space Restrictions** - Multi-jackbolt tensioners are easy to install in confined spaces.
- **Time-saving** - SUPERBOLT tensioners can be tightened in a fraction of the time, compared to most other methods. Although there are multiple jackbolts that can be used, field experience has proven that by using air tools, installation times are quick and easy.

Operation

The ability to maintain necessary preloads is crucial for keeping machinery running. Using multi-jackbolt technology, allows for proper preloading of the bolted joint in the operation.

Advantages:

- **Accuracy** - Accurate and even tension across bolted joints, reduce the tendency for leakages or uneven loading of adjacent fasteners.
- **Properly Bolted** - High preloads ensure that a joint does not loosen unintentionally.
- **Reliability** - SUPERBOLT tensioners increase the fatigue-life of the bolted joint.
- **Meeting your Challenges** - Special designs can accommodate space restrictions or environmental / temperature conditions in any type of operating environment.
- **Downtime** - Properly designed and tightened joints will not loosen during service, which reduces downtime.

Maintenance

Routine equipment maintenance requires the removal and re-installation of SUPERBOLT tensioners. Using and maintaining multi-jackbolt tensioners is safe and easy.

Advantages:

- **Easy to Check** - Due to the low torques required, it is easy to identify if the joint is properly tightened by doing simple torque tests using hand tools.
- **Multiple Workers** - Only hand tools are needed, therefore multiple workers can work in conjunction, when required.
- **Galling** - Tightening in pure tension eliminates thread galling which commonly occurs with direct torquing methods.
- **Removal** - Easy removal reduces expensive downtime that can occur with standard bolting methods.
- **Reusable** - Preload can be restored almost anywhere and under any conditions, with the use of simple hand tools. SUPERBOLT tensioners are fully reusable.

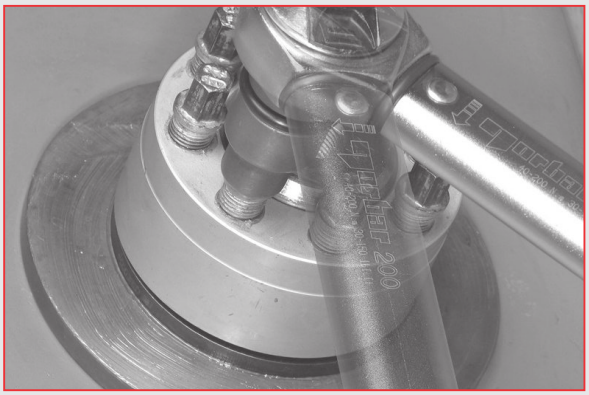

Selection Guide

Product Line	Nut-Style Tensioners			
Main Characteristics	**Standard**	**High Strength**	**Medium Temperatures**	**Medium Temperatures, Tall**
Series	MT	CY	H650	H650T
Dimensional Range Metric	M16-M160 1.9 cm - 15.2 cm	M16–M160 1.9 cm - 15.2 cm"	M20–M125 1.9 cm - 12.7 cm	M24–M100 2.5 cm - 10.2 cm
Approximate Bolt Stress Depending on Size	450 to 700 N/mm² 60 to 100 KSI	500 to 900 N/mm² 70 to 130 KSI	310 N/mm² 45 KSI Based on stress area	310 N/mm² 45 KSI Based on stress area
Temperature Range	-10°C to 250°C 0°F to 500°F	-40°C to 250°C -50°F to 500°F	Up to 350°C Up to 650°F	Up to 350°C Up to 650°F
	Lower temperatures on demand			
Surface Treatment	Optional	Optional	Optional	Optional
Application Samples	Bolting applications in demanding industries.	Similar to MT, but for higher strength.	Large studs on: - Boiler Feed Pumps - Boiler Circulating Pumps - Reactors - Heat Exchangers	Split lines on: - Turbines - Engines - Pumps - Compressors
Jackbolt Lubricant	JL-G or JL-AS	JL-G or JL-AS	JL-G or P37	JL-G or P37
NOTE	Equivalent bolt-style tensioner: SB8	Equivalent bolt-style tensioner: SB12	–	Also for applications with limited space in the diameter
Page Reference	12	13	14	15

Special Products for when the Application Requires it.

BMG offers a wide range of pre-engineered solutions, including special materials and designs. SUPERBOLT have made specialised nut-style tensioners with diameters of up to 1500 mm and products for operating temperatures of up to 700°C (1292°F). Our expertise are unique in the market, refer to pages 9–15 for a few case studies. SUPERBOLT has developed a specific series suitable for specific industries. For applications where the above standard range does not meet your requirements, please contact BMG's Fasteners division.

Selection Guide

Nut-Style Tensioners				
Compact	**Standard**	**High Strength**	**Standard**	**High Strength**
SJ	SB8	SB12	SX8	SX12
M20–M160 1.9 cm - 15.2 cm	M16–M160 1.9 cm - 15.2 cm	M20–M90 1.9 cm - 8.9 cm	M20–M160 1.9 cm - 15.2 cm	M20–M160 1.9 cm - 15.2 cm
250 to 400 N/mm² 35 to 60 KSI	400 to 650 N/mm² 60 to 95 KSI	500 to 850 N/mm² 70 to 125 KSI	450 to 700 N/mm² 60 to 100 KSI	500 to 900 N/mm² 70 to 130 KSI
-10°C to 250°C	-10°C to 250°C	-10°C to 250°C	-10°C to 250°C	-40°C to 250°C
Lower temperatures on demand				
Optional	Optional	Optional	Optional	Optional
Limited Height: - Hydraulic Cylinders - Shaft Mounts - Piston Connections - Foundations	Bolting applications in demanding industries.	Similar to SB8 but for higher strength.	Reactive nut for "through-hole" applications. Adds elasticity to bolted joints. Highly recommended for short clamp lengths.	Similar to SX8 but for higher strength.
JL-G or JL-AS	JL-G or JL-AS	JL-G or JL-AS	-	-
–	Equivalent nut-style tensioner: MT	Equivalent nut-style tensioner: CY	Used in combination with MT nut-style tensioners / Sb8 bolt-style tensioners.	Used in combination with CY nut-style tensioners / Sb12 bolt-style tensioners.
16	18	19	20	21

Special Products for when the Application Requires it.

BMG offers a wide range of pre-engineered solutions, including special materials and designs. SUPERBOLT have made specialised nut-style tensioners with diameters of up to 1500 mm and products for operating temperatures of up to 700°C (1292°F). Our expertise are unique in the market, refer to pages 9–15 for a few case studies. SUPERBOLT has developed a specific series suitable for specific industries. For applications where the above standard range does not meet your requirements, please contact BMG's Fasteners division.

SUPERBOLT MANUFACTURING

SUPERBOLT manufacturing facilities include world class CNC machining operations. Their capacity for machining allows for a quick turnaround of standard and special multi-jackbolt tensioners as well as other related bolting products.

Quality and Traceability

Special attention has been paid to developing and implementing quality systems to work in highly critical and demanding industries. Quality control, including thread gauging and measurement systems, is a standard operating procedure.

The traceability is marked as a function when using the multijackbolt nut and bolt bodies.

An example of the Part Marking Information

SUPERBOLT
Part Number: MT-M36x4
Lot Number: 7900
Max. Load: 457 kN
Material Code: CrMo

NOTE: Information may vary. Custom markings are possible upon request. For further information, please contact BMG's Fasteners department.

Most standard products are available off the shelf or within a short lead time.

You can ensure that the correct part gets delivered by using the following information:

Standard, Metric

MT -M 120x6 x ...../W

Type / Series

MT	Nut-style Tensioner, Standard
CY	Nut-style Tensioner, High Strength
SJ	Nut-style Tensioner, Compact
H650	Nut-style Tensioner, Medium Temperature
H650T	Nut-style Tensioner, Medium Temperature, Tall, Slim O.D.
SX8	Flexnut, Standard
SX12	Flexnut, High Strength
SB8	Bolt-style Tensioner, Standard
SB12	Bolt-style Tensioner, High Strength

Standard Thread Profile

M	Metric

Thread Size

d_0 x p	Nominal Diameter x Pitch

Nominal Length L (refer to sketches on pages 18 & 19) (mm)

Washer

Standard, Imperial

MT -112 -7 UNC x ..... /W

Type / Series (same as above)

Thread Size (Nominal Diameter d_0)

xxx... Decimal, rounded to 2 decimal digits x 100

Threads per Inch (TPI)

Standard Thread Profiles

UN, UNC, UNF Unified according to ANSI B1.1

Nominal Length L (see sketches on pages 18 & 19) (inch) decimal, rounded to 2 decimal digits

Washer

Specials

MT - .....

Type / Series

Special Designation Number

All threads are available upon request. Examples:

A - Acme (please specify standard)
S - Buttress (please specify standard)
W - Metric Whitworth
Rd - Round (please specify standard)
Tr - Trapezoidal (please specify standard)
BSW / BSF - Whitworth Threads

MT SUPERBOLT NUT-STYLE TENSIONER, STANDARD

Components:

1 - Nut Body
2 - Jackbolts
3 - Hardened Washer

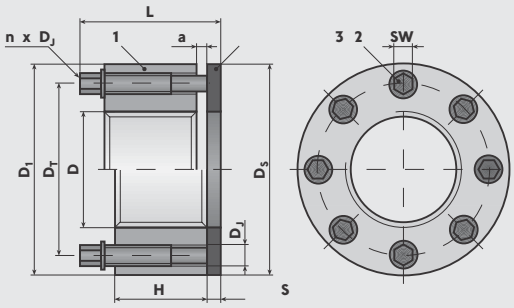

Metric	Size				Nut Body			Jackbolt				Hardened Washer		Height	Weight	Preload Total		Torque per Jackbolt	
Part No.	Thread D	Available Pitch P_1	P_2	P_3	D_1	H	D_T	D_J	n	SW	a	D_S	S	tot. L	kg	nom. F_1	max. F_2	nom. M_1	max. M_2
	mm				mm											kN		Nm	
MT-M16x.../W	M16	2	1.5	1	34	16	25	M6x0.75	4	5	6	32	3	33	0.11	73	94	14	18
MT-M20x.../W	M20	2.5	1.5	1	38	16	29	M6x0.75	6	5	6	38	4	34	0.14	110	140	14	18
MT-M22x.../W	M22	2.5	1.5	1	41	16	31	M6x0.75	6	5	6	41	4	34	0.16	110	140	14	18
MT-M24x.../W	M24	3	2	1.5	44	16	33	M6x0.75	8	5	6	43	4	34	0.19	145	187	14	18
MT-M27x.../W	M27	3	2	1.5	50	24	39	M8x1	6	6	6	50	5	45	0.35	214	285	36	48
MT-M30x.../W	M30	3.5	2	1.5	53	24	42	M8x1	6	6	6	53	5	45	0.37	214	285	36	48
MT-M33x.../W	M33	3.5	2	1.5	59	24	45	M8x1	8	6	6	59	5	45	0.48	285	380	36	48
MT-M36x.../W	M36	4	3	1.5	66	32	51	M10x1.25	6	8	8	66	5	57	0.76	343	457	72	96
MT-M39x.../W	M39	4	3	1.5	70	32	54	M10x1.25	8	8	8	70	5	57	0.90	457	610	72	96
MT-M42x.../W	M42	4.5	3	1.5	75	32	57	M10x1.25	8	8	8	73	5	57	1.01	457	610	72	96
MT-M45x.../W	M45	4.5	3	1.5	83	38	63	M12x1.25	8	10	10	81	6	68	1.48	700	935	131	175
MT-M48x.../W	M48	5	3	1.5	85	38	66	M12x1.25	8	10	10	85	6	68	1.50	700	935	131	175
MT-M52x.../W	M52	5	3	2	94	38	70	M12x1.25	8	10	10	89	6	68	1.80	700	935	131	175
MT-M56x.../W	M56	5.5	4	2	100	38	76	M12x1.25	8	10	10	95	6	68	2.00	700	935	131	175
MT-M60x.../W	M60	5.5	4	2	107	38	78	M12x1.25	10	10	10	100	6	68	2.30	875	1160	131	175
MT-M64x.../W	M64	6	4	2	113	53	87	M16x1.5	8	14	12	112	8	92	3.65	1270	1690	315	420
MT-M68x.../W	M68	6	4	2	117	53	91	M16x1.5	8	14	12	117	8	92	3.85	1270	1690	315	420
MT-M72x.../W	M72	6	4	2	120	56	95	M16x1.5	8	14	9	120	8	92	4.00	1270	1690	315	420
MT-M76x.../W	M76	6	4	2	132	56	100	M16x1.5	12	14	9	127	8	92	5.10	1900	2530	315	420
MT-M80x.../W	M80	6	4	2	132	56	103	M16x1.5	12	14	9	127	8	92	4.80	1900	2530	315	420
MT-M85x.../W	M85	6	4	2	137	56	108	M16x1.5	12	14	9	137	8	92	5.10	1900	2530	315	420
MT-M90x.../W	M90	6	4	2	145	59	113	M16x1.5	16	14	13	140	8	99	6.00	2530	3380	315	420
MT-M100x.../W	M100	6	4	2	164	61	123	M16x1.5	16	14	11	152	8	99	7.80	2530	3380	315	420
MT-M110x.../W	M110	6	4	2	177	79	139	M20x1.5	12	17	16	172	10	125	11.40	3150	4200	645	860
MT-M120x.../W	M120	6	4	2	189	81	149	M20x1.5	16	17	14	179	10	125	13.00	4200	5600	645	860
MT-M125x.../W	M125	6	4	2	194	81	154	M20x1.5	16	17	14	190	10	125	13.50	4200	5600	645	860
MT-M130x.../W	M130	6	4	2	205	94	159	M20x1.5	18	17	16	202	10	140	17.50	4700	6300	645	860
MT-M140x.../W	M140	6	4	2	215	94	169	M20x1.5	20	17	16	215	10	140	18.70	5250	7000	645	860
MT-M150x.../W	M150	6	4	2	225	94	179	M20x1.5	20	17	16	225	12	142	20.00	5250	7000	645	860
MT-M160x.../W	M160	6	4	-	234	107	189	M20x1.5	24	17	23	234	12	162	24.10	6300	8400	645	860

Imperial	Size				Nut Body			Jackbolt				Hardened Washer		Height	Weight	Preload Total		Torque per Jackbolt	
Part No.	Thread D	Available TPI TPI_1	TPI_2	TPI_3	D_1	H	D_T	D_J	n	SW	a	D_S	S	tot. L	Lb	nom. F_1	max. F_2	nom. M_1	max. M_2
	In				In											Lb		ft	
MT-075-.../W	3/4	10	16	-	1.47	0.70	1.13	1/4-28	4	3/16	0.24	1.50	0.13	1.38	0.31	20400	27200	14	18
MT-087-.../W	7/8	9	14	-	1.60	0.70	1.26	1/4-28	6	3/16	0.24	1.63	0.13	1.38	0.34	30600	40800	14	18
MT-100-.../W	1	8	12	14	1.90	0.93	1.46	5/16-24	6	1/4	0.20	2.00	0.19	1.71	0.68	48600	64800	27	36
MT-112-.../W	1-1/8	7	8	12	2.08	0.93	1.59	5/16-24	6	1/4	0.20	2.13	0.19	1.71	0.79	48600	64800	27	36
MT-125-.../W	1-1/4	7	8	12	2.25	0.94	1.75	5/16-24	8	1/4	0.19	2.38	0.19	1.71	0.92	64800	86400	27	36
MT-137-.../W	1-3/8	6	8	12	2.46	1.20	1.94	3/8-24	6	5/16	0.25	2.50	0.19	2.12	1.40	73800	98400	49	65
MT-150-.../W	1-1/2	6	8	12	2.70	1.20	2.07	3/8-24	8	5/16	0.25	2.75	0.19	2.12	1.70	98400	131200	49	65
MT-162-.../W	1-5/8	6	8	12	2.96	1.20	2.20	3/8-24	8	5/16	0.25	2.88	0.19	2.12	2.01	98400	131200	49	65
MT-175-.../W	1-3/4	5	8	12	3.08	1.42	2.38	7/16-20	8	3/8	0.28	3.13	0.25	2.49	2.53	129600	172800	75	100
MT-187-.../W	1-7/8	6	8	12	3.59	1.60	2.74	1/2-20	8	7/16	0.40	3.50	0.25	2.85	4.07	175200	233600	114	152
MT-200-.../W	2	4.5	8	12	3.59	1.60	2.74	1/2-20	8	7/16	0.40	3.50	0.25	2.85	3.87	175200	233600	114	152
MT-225-.../W	2-1/4	4.5	8	12	3.95	1.60	3.00	1/2-20	8	7/16	0.40	3.75	0.25	2.85	4.51	175200	233600	114	152
MT-250-.../W	2-1/2	4	8	12	4.45	2.10	3.43	5/8-18	8	9/16	0.45	4.50	0.31	3.61	7.82	285600	380800	233	310
MT-275-.../W	2-3/4	4	8	12	4.70	2.10	3.69	5/8-18	8	9/16	0.45	4.75	0.31	3.61	8.36	285600	380800	233	310
MT-300-.../W	3	4	6	8	5.20	2.10	3.95	5/8-18	12	9/16	0.45	5.00	0.31	3.61	10.30	428400	571200	233	310
MT-325-.../W	3-1/4	4	6	8	5.45	2.20	4.15	5/8-18	12	9/16	0.35	5.00	0.31	3.61	11.04	428400	571200	233	310
MT-350-.../W	3-1/2	4	6	8	5.70	2.30	4.40	5/8-18	16	9/16	0.51	5.50	0.31	3.87	12.62	571200	761600	233	310
MT-375-.../W	3-3/4	4	6	8	6.20	2.40	4.65	5/8-18	16	9/16	0.41	5.50	0.31	3.87	15.08	571200	761600	233	310
MT-400-.../W	4	4	6	8	6.45	2.60	4.90	5/8-18	18	9/16	0.53	6.00	0.31	4.19	17.31	642600	856800	233	310
MT-425-.../W	4-1/4	4	6	8	6.95	3.00	5.33	3/4-16	16	5/8	0.50	6.40	0.38	4.76	23.41	806400	1075200	390	520
MT-450-.../W	4-1/2	4	6	8	7.20	3.00	5.58	3/4-16	16	5/8	0.50	6.65	0.38	4.76	24.44	806400	1075200	390	520
MT-475-.../W	4-3/4	4	6	8	7.45	3.20	5.83	3/4-16	18	5/8	0.60	6.90	0.38	5.06	27.13	907200	1209600	390	520
MT-500-.../W	5	4	6	8	7.70	3.30	6.08	3/4-16	20	5/8	0.50	7.15	0.38	5.06	28.83	1008000	1344000	390	520
MT-525-.../W	5-1/4	4	6	8	8.45	3.70	6.58	3/4-16	22	5/8	0.40	7.65	0.38	5.36	40.06	1108800	1478400	390	520
MT-550-.../W	5-1/2	4	6	8	8.45	3.70	6.58	3/4-16	22	5/8	0.40	7.65	0.38	5.36	37.56	1108800	1478400	390	520
MT-575-.../W	5-3/4	4	6	8	8.95	4.00	7.11	3/4-16	24	5/8	0.50	8.15	0.38	5.76	46.26	1209600	1612800	390	520
MT-600-.../W	6	4	6	8	8.95	4.00	7.11	3/4-16	24	5/8	0.50	8.15	0.38	5.76	43.32	1209600	1612800	390	520

NOTE:

- Maximum values are valid for permanent bolting applications only, including reaction forces.
- Other sizes, thread pitches or threads per inch (TPI) are available on request. Please contact BMG's Fasteners Department for more information.
- The dimensions listed are representative of Superbolt tensioner products. Typical manufacturing tolerances apply (approximately within 1 mm or 1%).

CY SUPERBOLT NUT-STYLE TENSIONER, HIGH STRENGTH

Components:

1 - Nut Body
2 - Jackbolts
3 - Hardened Washer

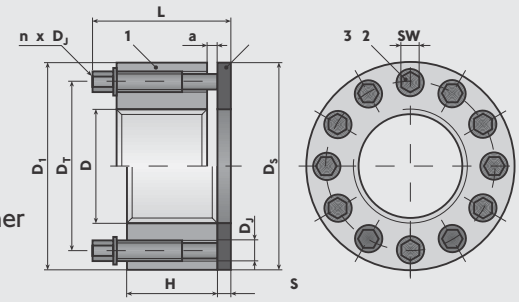

Metric	Size				Nut Body			Jackbolt				Hardened Washer		Height	Weight	Preload Total		Torque per Jackbolt	
Part No.	Thread D	Available Pitch P_1	P_2	P_3	D_1	H	D_T	D_J	n	SW	a	D_S	S	tot. L	kg	nom. F_1	max. F_2	nom. M_1	max. M_2
	mm				mm											kN		Nm	
CY-M16x.../W	M16	2	1.5	1	34	16	25	M6x0.75	6	5	6	32	3	33	0.12	110	140	14	18
CY-M20x.../W	M20	2.5	1.5	1	38	17	29	M6x0.75	8	5	5	38	4	34	0.15	145	185	14	18
CY-M22x.../W	M22	2.5	1.5	1	41	17	31	M6x0.75	8	5	5	41	4	34	0.17	145	185	14	18
CY-M24x.../W	M24	3	2	1.5	47	24	36	M8x1	6	6	6	47	4	44	0.30	215	285	36	48
CY-M27x.../W	M27	3	2	1.5	51	24	39	M8x1	8	6	6	50	5	45	0.37	285	380	36	48
CY-M30x.../W	M30	3.5	2	1.5	54	24	42	M8x1	8	6	6	53	5	45	0.38	285	380	36	48
CY-M33x.../W	M33	3.5	2	1.5	62	32	48	M10x1.25	6	8	8	61	5	57	0.70	345	460	72	96
CY-M36x.../W	M36	4	3	1.5	66	32	51	M10x1.25	8	8	8	66	5	57	0.79	455	610	72	96
CY-M39x.../W	M39	4	3	1.5	72	32	54	M10x1.25	10	8	8	70	5	57	0.97	570	760	72	96
CY-M42x.../W	M42	4.5	3	1.5	76	32	57	M10x1.25	12	8	8	73	5	57	1.10	685	915	72	96
CY-M45x.../W	M45	4.5	3	1.5	81	38	62	M12x1.25	8	10	10	80	6	68	1.40	700	935	131	175
CY-M48x.../W	M48	5	3	1.5	85	38	66	M12x1.25	10	10	10	85	6	68	1.54	875	1170	131	175
CY-M52x.../W	M52	5	3	2	94	38	70	M12x1.25	12	10	10	90	6	68	1.80	1050	1400	131	175
CY-M56x.../W	M56	5.5	4	2	98	38	74	M12x1.25	12	10	10	94	6	68	1.93	1050	1400	131	175
CY-M60x.../W	M60	5.5	4	2	107	59	83	M16x1.5	8	14	13	106	8	99	3.70	1270	1670	315	420
CY-M64x.../W	M64	6	4	2	113	59	87	M16x1.5	10	14	13	112	8	99	4.10	1580	2100	315	420
CY-M68x.../W	M68	6	4	2	117	59	91	M16x1.5	12	14	13	117	8	99	4.30	1900	2530	315	420
CY-M72x.../W	M72	6	4	2	121	59	95	M16x1.5	12	14	13	120	8	99	4.50	1900	2530	315	420
CY-M76x.../W	M76	6	4	2	132	61	102	M16x1.5	16	14	11	127	8	99	5.60	2530	3370	315	420
CY-M80x.../W	M80	6	4	2	133	61	103	M16x1.5	16	14	11	127	8	99	5.40	2530	3370	315	420
CY-M85x.../W	M85	6	4	2	139	61	108	M16x1.5	16	14	11	137	8	99	5.80	2530	3370	315	420
CY-M90x.../W	M90	6	4	2	145	61	113	M16x1.5	16	14	11	140	8	99	6.30	2530	3370	315	420
CY-M100x.../W	M100	6	4	2	157	61	123	M16x1.5	16	14	11	152	8	99	7.00	2530	3370	315	420
CY-M110x.../W	M110	6	4	2	177	61	133	M16x1.5	20	14	11	163	8	99	9.00	3180	4200	315	420
CY-M120x.../W	M120	6	4	2	189	81	149	M20x1.5	18	17	14	179	10	125	13.10	4700	6300	645	860
CY-M125x.../W	M125	6	4	2	194	81	154	M20x1.5	18	17	14	190	10	125	13.70	4700	6300	645	860
CY-M130x.../W	M130	6	4	2	205	94	159	M20x1.5	20	17	16	202	10	140	17.60	5250	7000	645	860
CY-M140x.../W	M140	6	4	2	215	94	169	M20x1.5	22	17	16	215	10	140	18.89	5750	7700	645	860
CY-M150x.../W	M150	6	4	2	225	94	179	M20x1.5	22	17	16	225	12	142	20.10	5750	7700	645	860
CY-M160x.../W	M160	6	4	-	226	107	189	M20x1.5	24	17	23	220	10	160	20.80	6300	8400	645	860

Imperial	Size				Nut Body			Jackbolt				Hardened Washer		Height	Weight	Preload Total		Torque per Jackbolt	
Part No.	Thread D	Available TPI TPI_1	TPI_2	TPI_3	D_1	H	D_T	D_J	n	SW	a	D_S	S	tot. L	Lb	nom. F_1	max. F_2	nom. M_1	max. M_2
	In				In											Lb		ft	
CY-075-.../W	3/4	10	16	-	1.47	0.70	1.13	1/4-28	6	3/16	0.24	1.50	0.13	1.38	0.31	30600	40800	14	18
CY-087-.../W	7/8	9	14	-	1.70	0.70	1.26	1/4-28	8	3/16	0.24	1.63	0.13	1.38	0.39	40800	54400	14	18
CY-100-.../W	1	8	12	14	1.90	0.93	1.46	5/16-24	6	1/4	0.20	2.00	0.19	1.71	0.68	48600	64800	27	36
CY-112-.../W	1-1/8	7	8	12	2.08	0.93	1.59	5/16-24	8	1/4	0.20	2.13	0.19	1.71	0.78	64800	86400	27	36
CY-125-.../W	1-1/4	7	8	12	2.32	1.20	1.81	3/8-24	6	5/16	0.25	2.38	0.19	2.12	1.30	73800	98400	49	65
CY-137-.../W	1-3/8	6	8	12	2.46	1.20	1.92	3/8-24	8	5/16	0.25	2.50	0.19	2.12	1.42	98400	131200	49	65
CY-150-.../W	1-1/2	6	8	12	2.80	1.42	2.13	7/16-20	8	3/8	0.28	2.75	0.19	2.43	2.11	129600	172800	75	100
CY-162-.../W	1-5/8	6	8	12	2.96	1.42	2.26	7/16-20	8	3/8	0.28	2.88	0.19	2.43	2.29	129600	172800	75	100
CY-175-.../W	1-3/4	5	8	12	3.20	1.42	2.38	7/16-20	12	3/8	0.28	3.13	0.25	2.49	2.80	194400	259200	75	100
CY-187-.../W	1-7/8	6	8	12	3.59	1.60	2.74	1/2-20	8	7/16	0.40	3.50	0.25	2.85	4.07	175200	233600	114	152
CY-200-.../W	2	4.5	8	12	3.70	1.60	2.74	1/2-20	12	7/16	0.40	3.50	0.25	2.85	4.24	262800	350400	114	152
CY-225-.../W	2-1/4	4.5	8	12	3.95	1.60	3.00	1/2-20	12	7/16	0.40	3.75	0.25	2.85	4.59	262800	350400	114	152
CY-250-.../W	2-1/2	4	8	12	4.45	2.30	3.43	5/8-18	12	9/16	0.51	4.50	0.31	3.87	8.64	428400	571200	233	310
CY-275-.../W	2-3/4	4	8	12	4.70	2.40	3.69	5/8-18	12	9/16	0.41	4.75	0.31	3.87	9.45	428400	571200	233	310
CY-300-.../W	3	4	6	8	5.20	2.30	3.95	5/8-18	16	9/16	0.51	5.00	0.31	3.87	11.33	571200	761600	233	310
CY-325-.../W	3-1/4	4	6	8	5.45	2.30	4.15	5/8-18	16	9/16	0.51	5.00	0.31	3.87	11.79	571200	761600	233	310
CY-350-.../W	3-1/2	4	6	8	5.70	2.40	4.40	5/8-18	18	9/16	0.41	5.50	0.31	3.87	13.02	642600	856800	233	310
CY-375-.../W	3-3/4	4	6	8	5.95	2.40	4.65	5/8-18	18	9/16	0.41	5.50	0.31	3.87	13.49	642600	856800	233	310
CY-400-.../W	4	4	6	8	6.20	2.60	4.90	5/8-18	20	9/16	0.53	6.00	0.31	4.19	15.50	714000	952000	233	310
CY-425-.../W	4-1/4	4	6	8	6.95	3.00	5.33	3/4-16	18	5/8	0.50	6.40	0.38	4.76	23.50	907200	1209600	390	520
CY-450-.../W	4-1/2	4	6	8	7.20	3.00	5.58	3/4-16	18	5/8	0.50	6.65	0.38	4.76	24.53	907200	1209600	390	520
CY-475-.../W	4-3/4	4	6	8	7.45	3.20	5.83	3/4-16	20	5/8	0.60	6.90	0.38	5.06	29.90	1008000	1344000	390	520
CY-500-.../W	5	4	6	8	7.70	3.30	6.08	3/4-16	20	5/8	0.50	7.15	0.38	5.06	28.83	1008000	1344000	390	520
CY-525-.../W	5-1/4	4	6	8	7.95	3.70	6.58	3/4-16	22	5/8	0.40	7.65	0.38	5.36	33.12	1108800	1478400	390	520
CY-550-.../W	5-1/2	4	6	8	7.95	3.70	6.58	3/4-16	22	5/8	0.40	7.65	0.38	5.36	30.62	1108800	1478400	390	520
CY-575-.../W	5-3/4	4	6	8	8.45	4.00	7.08	3/4-16	24	5/8	0.50	8.15	0.38	5.76	38.31	1209600	1612800	390	520
CY-600-.../W	6	4	6	8	8.45	4.00	7.08	3/4-16	24	5/8	0.50	8.15	0.38	5.76	35.36	1209600	1612800	390	520

NOTE:

- Maximum values are valid for permanent bolting applications only, including reaction forces.
- Other sizes, thread pitches or threads per inch (TPI) are available on request. Please contact BMG's Fasteners Department for more information.
- The dimensions listed are representative of Superbolt tensioner products. Typical manufacturing tolerances apply (approximately within 1 mm or 1%).

H650 SUPERBOLT NUT-STYLE TENSIONER FOR MEDIUM TEMPERATURES

Components:

1 - Nut Body
2 - Jackbolts
3 - Hardened Washer

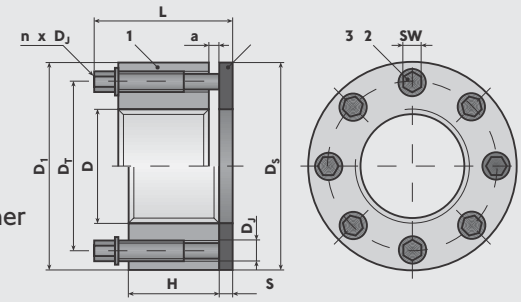

Metric	Size				Nut Body			Jackbolt				Hardened Washer		Height	Weight	Preload Total	Torque per Jackbolt
Part No.	Thread D	Available Pitch P_1	P_2	P_S	D_1	H	D_T	D_J	n	SW	a	D_S	S	tot. L	kg	nom. F_i	nom. M_i
	mm				mm											kN	Nm
H650-M20x.../W	M20	2.5	1.5	1	38	16	29	M6x0.75	6	5	6	38	4	34	0.14	75	10
H650-M22x.../W	M22	2.5	1.5	1	41	16	31	M6x0.75	6	5	6	41	4	34	0.16	94	12
H650-M24x.../W	M24	3	2	1.5	44	16	33	M6x0.75	8	5	6	43	4	34	0.19	110	11
H650-M27x.../W	M27	3	2	1.5	50	24	39	M8x1	6	6	6	50	5	45	0.35	140	24
H650-M30x.../W	M30	3.5	2	1.5	53	24	42	M8x1	6	6	6	53	5	45	0.37	175	30
H650-M33x.../W	M33	3.5	2	1.5	59	24	45	M8x1	8	6	6	59	5	45	0.48	215	27
H650-M36x.../W	M36	4	3	1.5	66	32	51	M10x1.25	6	8	8	66	5	57	0.76	255	53
H650-M39x.../W	M39	4	3	1.5	70	32	54	M10x1.25	8	8	8	70	5	57	0.90	300	47
H650-M42x.../W	M42	4.5	3	1.5	75	32	57	M10x1.25	8	8	8	73	5	57	1.01	350	55
H650-M45x.../W	M45	4.5	3	1.5	83	38	63	M12x1.25	8	10	10	81	6	68	1.48	405	75
H650-M48x.../W	M48	5	3	1.5	85	38	66	M12x1.25	8	10	10	85	6	68	1.50	455	85
H650-M52x.../W	M52	5	3	2	94	38	70	M12x1.25	8	10	10	89	6	68	1.80	540	100
H650-M56x.../W	M56	5.5	4	2	100	38	76	M12x1.25	8	10	10	95	6	68	2.00	630	120
H650-M60x.../W	M60	5.5	4	2	107	38	78	M12x1.25	10	10	10	100	6	68	2.30	740	110
H650-M64x.../W	M64	6	4	2	113	53	87	M16x1.5	8	14	12	112	8	92	3.65	830	205
H650-M72x.../W	M72	6	4	2	120	56	95	M16x1.5	8	14	9	120	8	92	4.00	1070	265
H650-M76x.../W	M76	6	4	2	132	56	100	M16x1.5	12	14	9	127	8	92	5.10	1200	200
H650-M80x.../W	M80	6	4	2	132	56	103	M16x1.5	12	14	9	127	8	92	4.80	1330	220
H650-M90x.../W	M90	6	4	2	145	59	113	M16x1.5	16	14	13	140	8	99	6.00	1730	215
H650-M100x.../W	M100	6	4	2	164	61	123	M16x1.5	16	14	11	152	8	99	7.80	2170	270
H650-M110x.../W	M110	6	4	2	177	79	139	M20x1.5	12	17	16	172	10	125	11.40	2650	550
H650-M120x.../W	M120	6	4	2	189	81	149	M20x1.5	16	17	14	179	10	125	13.00	3210	500
H650-M125x.../W	M125	6	4	2	194	81	154	M20x1.5	16	17	14	190	10	125	13.50	3470	540

Imperial	Size				Nut Body			Jackbolt				Hardened Washer		Height	Weight	Preload Total	Torque per Jackbolt
Part No.	Thread D	Available Pitch P_1	P_2	P_S	D_1	H	D_T	D_J	n	SW	a	D_S	S	tot. L	Lb	nom. F_i	nom. M_i
	In				In											Lb	ft
H650-075-.../W	3/4	10	16	-	1.47	.70	1.132	1/4-28	4	3/16	0.24	1.50	0.13	1.38	0.31	13950	9
H650-087-.../W	7/8	9	14	-	1.60	.70	1.262	1/4-28	6	3/16	0.24	1.63	0.13	1.38	0.34	19790	9
H650-100-.../W	1	8	12	14	1.90	.93	1.456	5/16-24	6	1/4	0.20	2.00	0.19	1.71	0.68	27260	15
H650-112-.../W	1-1/8	7	8	12	2.08	.93	1.585	5/16-24	6	1/4	0.20	2.13	0.19	1.71	0.79	35570	20
H650-125-.../W	1-1/4	7	8	12	2.25	.94	1.747	5/16-24	8	1/4	0.19	2.38	0.19	1.71	0.92	44990	19
H650-137-.../W	1-3/8	6	8	12	2.46	1.20	1.941	3/8-24	6	5/16	0.25	2.50	0.19	2.12	1.40	55510	37
H650-150-.../W	1-1/2	6	8	12	2.70	1.20	2.070	3/8-24	8	5/16	0.25	2.75	0.19	2.12	1.70	67130	33
H650-162-.../W	1-5/8	6	8	12	2.96	1.20	2.200	3/8-24	8	5/16	0.25	2.88	0.19	2.12	2.01	79860	40
H650-175-.../W	1-3/4	5	8	12	3.08	1.42	2.381	7/16-20	8	3/8	0.28	3.13	0.25	2.49	2.53	93700	54
H650-187-.../W	1-7/8	6	8	12	3.59	1.60	2.743	1/2-20	8	7/16	0.40	3.50	0.25	2.85	4.07	108600	71
H650-200-.../W	2	4.5	8	12	3.59	1.60	2.743	1/2-20	8	7/16	0.40	3.50	0.25	2.85	3.87	124700	81
H650-225-.../W	2-1/4	4.5	8	12	3.95	1.60	3.003	1/2-20	8	7/16	0.40	3.75	0.25	2.85	4.51	160100	104
H650-250-.../W	2-1/2	4	8	12	4.45	2.10	3.429	5/8-18	8	9/16	0.45	4.50	0.31	3.61	7.82	199900	163
H650-275-.../W	2-3/4	4	8	12	4.70	2.10	3.688	5/8-18	8	9/16	0.45	4.75	0.31	3.61	8.36	244100	199
H650-300-.../W	3	4	6	8	5.20	2.10	3.947	5/8-18	12	9/16	0.45	5.00	0.31	3.61	10.30	292800	159
H650-325-.../W	3-1/4	4	6	8	5.45	2.20	4.150	5/8-18	12	9/16	0.35	5.00	0.31	3.61	11.04	345900	188
H650-350-.../W	3-1/2	4	6	8	5.70	2.30	4.400	5/8-18	16	9/16	0.51	5.50	0.31	3.87	12.62	403300	164
H650-375-.../W	3-3/4	4	6	8	6.20	2.40	4.650	5/8-18	16	9/16	0.41	5.50	0.31	3.87	15.08	465300	189
H650-400-.../W	4	4	6	8	6.45	2.60	4.900	5/8-18	18	9/16	0.53	6.00	0.31	4.19	17.31	531600	192
H650-425-.../W	4-1/4	4	6	8	6.95	3.00	5.330	3/4-16	16	5/8	0.50	6.40	0.38	4.76	23.41	602300	291
H650-450-.../W	4-1/2	4	6	8	7.20	3.00	5.580	3/4-16	16	5/8	0.50	6.65	0.38	4.76	24.44	677500	328
H650-475-.../W	4-3/4	4	6	8	7.45	3.20	5.830	3/4-16	18	5/8	0.60	6.90	0.38	5.06	27.13	757100	326
H650-500-.../W	5	4	6	8	7.70	3.30	6.080	3/4-16	20	5/8	0.50	7.15	0.38	5.06	28.83	841100	325

NOTE:

- Other sizes, thread pitches or threads per inch (TPI) are available on request. Please contact BMG's Fasteners Department for more information.
- The dimensions listed are representative of Superbolt tensioner products. Typical manufacturing tolerances apply (approximately within 1 mm or 1%).

H650 SUPERBOLT NUT-STYLE TENSIONER FOR MEDIUM TEMPERATURES, TALL

Components:

1 - Nut Body
2 - Jackbolts
3 - Hardened Washer

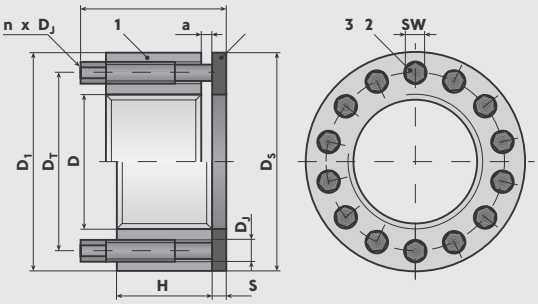

Metric	Size				Nut Body			Jackbolt				Hardened Washer		Height	Weight	Preload Total	Torque per Jackbolt
Part No.	Thread D	Available Pitch P_1	P_2	P_3	D_1	H	D_T	D_J	n	SW	a	D_S	S	tot. L	kg	nom. F_1	nom. M_1
	mm				mm											kN	Nm
H650T-M24x.../W	M24	3	2	1.5	41	28	32	M6x0.75	8	5	4	40	3	43	0.20	110	11
H650T-M27x.../W	M27	3	2	1.5	43	28	35	M6x0.75	10	5	4	43	3	43	0.25	140	11
H650T-M30x.../W	M30	3.5	2	1.5	46	28	38	M6x0.75	12	5	4	46	3	43	0.25	175	11
H650T-M33x.../W	M33	3.5	2	1.5	49	28	41	M6x0.75	14	5	4	49	3	43	0.30	215	12
H650T-M36x.../W	M36	4	3	1.5	53	28	44	M6x0.75	16	5	4	53	6	46	0.35	255	12
H650T-M39x.../W	M39	4	3	1.5	61	38	50	M8x1	10	6	5	61	4	57	0.60	300	30
H650T-M42x.../W	M42	4.5	3	1.5	64	38	53	M8x1	12	6	5	64	4	57	0.65	350	30
H650T-M45x.../W	M45	4.5	3	1.5	67	38	56	M8x1	14	6	5	67	6	59	0.75	405	29
H650T-M48x.../W	M48	5	3	1.5	72	38	59	M8x1	14	6	5	70	10	63	0.90	455	33
H650T-M52x.../W	M52	5	3	2	79	46	66	M10x1.25	12	8	6	78	5	69	1.25	540	56
H650T-M56x.../W	M56	5.5	4	2	84	46	70	M10x1.25	14	8	6	82	10	74	1.45	630	57
H650T-M60x.../W	M60	5.5	4	2	90	46	74	M10x1.25	16	8	6	86	14	78	1.75	740	58
H650T-M64x.../W	M64	6	4	2	96	62	80	M12x1.25	12	10	8	96	18	102	2.75	830	105
H650T-M72x.../W	M72	6	4	2	106	62	88	M12x1.25	16	10	8	105	6	90	2.80	1070	100
H650T-M76x.../W	M76	6	4	2	114	62	96	M12x1.25	16	10	8	112	12	96	3.50	1200	110
H650T-M80x.../W	M80	6	4	2	118	62	96	M12x1.25	18	10	8	112	15	99	3.70	1330	110
H650T-M90x.../W	M90	6	4	2	135	80	111	M16x1.5	14	14	9	135	9	117	6.10	1730	245
H650T-M100x.../W	M100	6	4	2	149	80	121	M16x1.5	16	14	9	144	19	127	7.85	2170	270

Imperial	Size				Nut Body			Jackbolt				Hardened Washer		Height	Weight	Preload Total	Torque per Jackbolt
Part No.	Thread D	Available Pitch P_1	P_2	P_3	D_1	H	D_T	D_J	n	SW	a	D_S	S	tot. L	Lb	nom. F_1	nom. M_1
	In				In											Lb	ft
H650T-100-.../W	1	8	12	14	1.67	1.10	1.34	1/4-28	8	3/16	0.18	1.67	0.13	1.72	0.53	27260	9
H650T-112-.../W	1-1/8	7	8	12	1.80	1.10	1.46	1/4-28	8	3/16	0.18	1.75	0.13	1.72	0.58	35570	12
H650T-125-.../W	1-1/4	7	8	12	1.92	1.10	1.59	1/4-28	12	3/16	0.18	1.88	0.13	1.72	0.64	44990	10
H650T-137-.../W	1-3/8	6	8	12	2.08	1.10	1.71	1/4-28	14	3/16	0.18	2.05	0.25	1.84	0.80	55510	11
H650T-150-.../W	1-1/2	6	8	12	2.34	1.50	1.92	5/16-24	10	1/4	0.20	2.29	0.15	2.24	1.17	67130	22
H650T-162-.../W	1-5/8	6	8	12	2.47	1.50	2.05	5/16-24	12	1/4	0.20	2.47	0.15	2.24	1.26	79860	22
H650T-175-.../W	1-3/4	5	8	12	2.62	1.50	2.17	5/16-24	14	1/4	0.20	2.60	0.25	2.34	1.46	93700	22
H650T-187-.../W	1-7/8	6	8	12	2.79	1.50	2.30	5/16-24	16	1/4	0.20	2.75	0.38	2.47	1.75	108600	22
H650T-200-.../W	2	4.5	8	12	3.06	1.80	2.51	3/8-24	12	5/16	0.25	3.00	0.20	2.73	2.45	124700	41
H650T-225-.../W	2-1/4	4.5	8	12	3.37	1.80	2.76	3/8-24	16	5/16	0.25	3.26	0.40	2.93	3.12	160100	40
H650T-250-.../W	2-1/2	4	8	12	3.75	2.10	3.09	7/16-20	16	3/8	0.25	3.68	0.40	3.29	4.38	199900	58
H650T-275-.../W	2-3/4	4	8	12	4.13	2.50	3.43	1/2-20	14	7/16	0.30	4.12	0.25	3.65	5.92	244100	91
H650T-300-.../W	3	4	6	8	4.49	2.50	3.68	1/2-20	16	7/16	0.30	4.40	0.50	3.90	7.50	292800	95
H650T-325-.../W	3-1/4	4	6	8	4.87	2.50	3.93	1/2-20	18	7/16	0.30	4.65	0.70	4.10	9.21	345900	100
H650T-350-.../W	3-1/2	4	6	8	5.30	3.15	4.34	5/8-18	14	9/16	0.35	5.19	0.35	4.60	12.69	403300	188
H650T-375-.../W	3-3/4	4	6	8	5.62	3.15	4.59	5/8-18	16	9/16	0.35	5.60	0.60	4.85	15.11	465300	189
H650T-400-.../W	4	4	6	8	5.97	3.15	4.84	5/8-18	18	9/16	0.35	5.69	0.80	5.05	17.26	531600	192

NOTE:

- Other sizes, thread pitches or threads per inch (TPI) are available on request. Please contact BMG's Fasteners Department for more information.
- The dimensions listed are representative of Superbolt tensioner products. Typical manufacturing tolerances apply (approximately within 1 mm or 1%).

SJ SUPERBOLT NUT-STYLE TENSIONER, COMPACT

Components:

1 - Nut Body
2 - Jackbolts
3 - Hardened Washer

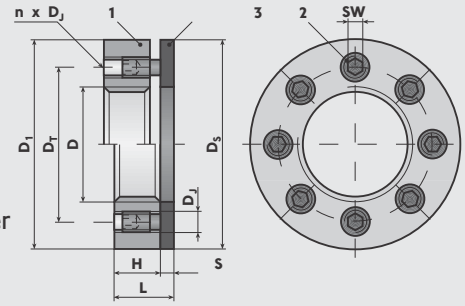

Metric	Size				Nut Body			Jackbolt			Hardened Washer		Height	Weight	Preload Total		Torque per Jackbolt	
Part No.	Thread D	Available Pitch P_1	P_2	P_3	D_1	H	D_T	D_J	n	SW	D_S	S	tot. L	kg	nom. F_1	max. F_2	nom. M_1	max. M_2
	mm				mm										kN		Nm	
SJ-M20x.../W	M20	2.5	1.5	1	43	15	32	M8x1	6	4	43	4	19	0.15	67	91	11	15
SJ-M22x.../W	M22	2.5	1.5	1	47	16	34	M8x1	8	4	45	5	21	0.20	81	105	10	13
SJ-M24x.../W	M24	3	2	1.5	50	16	36	M8x1	8	4	48	5	21	0.20	89	120	11	15
SJ-M27x.../W	M27	3	2	1.5	53	16	39	M8x1	10	4	50	5	21	0.25	100	130	10	13
SJ-M30x.../W	M30	3.5	2	1.5	60	21	45	M10x1.25	8	5	59	5	26	0.40	135	180	21	28
SJ-M33x.../W	M33	3.5	2	1.5	63	22	48	M10x1.25	10	5	63	5	27	0.40	155	200	19	25
SJ-M36x.../W	M36	4	3	1.5	69	28	54	M12x1.25	8	6	69	5	33	0.65	190	245	35	46
SJ-M39x.../W	M39	4	3	1.5	75	28	57	M12x1.25	10	6	75	5	33	0.80	255	335	38	50
SJ-M42x.../W	M42	4.5	3	1.5	81	28	60	M12x1.25	12	6	78	5	33	0.90	315	420	39	52
SJ-M45x.../W	M45	4.5	3	1.5	88	28	63	M12x1.25	12	6	81	6	34	1.00	315	420	39	52
SJ-M48x.../W	M48	5	3	1.5	101	31	71	M16x1.5	8	8	94	6	37	1.65	380	500	94	125
SJ-M52x.../W	M52	5	3	2	101	33	75	M16x1.5	8	8	94	6	39	1.65	380	500	94	125
SJ-M56x.../W	M56	5.5	4	2	113	33	79	M16x1.5	12	8	100	6	39	2.05	570	760	94	125
SJ-M60x.../W	M60	5.5	4	2	117	33	83	M16x1.5	12	8	106	6	39	2.15	570	760	94	125
SJ-M64x.../W	M64	6	4	2	119	33	87	M16x1.5	12	8	120	8	41	2.45	570	760	94	125
SJ-M68x.../W	M68	6	4	2	138	38	97	M20x1.5	12	10	125	8	46	3.60	710	950	145	195
SJ-M72x.../W	M72	6	4	2	151	38	101	M20x1.5	12	10	125	8	46	4.50	910	1200	185	245
SJ-M76x.../W	M76	6	4	2	151	38	105	M20x1.5	12	10	138	8	46	4.35	860	1130	175	230
SJ-M80x.../W	M80	6	4	2	158	38	109	M20x1.5	12	10	145	10	48	4.95	910	1200	185	245
SJ-M90x.../W	M90	6	4	2	170	51	125	M24x2	12	12	160	10	61	7.20	1160	1530	280	370
SJ-M100x.../W	M100	6	4	2	177	53	135	M24x2	12	12	180	10	63	7.75	1160	1530	280	370
SJ-M110x.../W	M110	6	4	2	190	59	145	M24x2	16	12	190	10	69	9.25	1550	2040	280	370
SJ-M120x.../W	M120	6	4	2	202	59	155	M24x2	16	12	202	10	69	10.25	1550	2040	280	370
SJ-M125x.../W	M125	6	4	2	205	59	160	M24x2	16	12	202	10	69	10.25	1550	2040	280	370
SJ-M130x.../W	M130	6	4	2	210	59	165	M24x2	16	12	202	10	69	10.50	1550	2040	280	370
SJ-M140x.../W	M140	6	4	2	221	59	175	M24x2	16	12	215	12	71	11.75	1550	2040	280	370
SJ-M150x.../W	M150	6	4	2	230	59	185	M24x2	16	12	225	12	71	12.25	1550	2040	280	370
SJ-M160x.../W	M160	6	4	-	240	59	195	M24x2	16	12	240	12	71	13.25	1550	2040	280	370

Imperial	Size				Nut Body			Jackbolt			Hardened Washer		Height	Weight	Preload Total		Torque per Jackbolt	
Part No.	Thread D	Available TPI TPI_1	TPI_2	TPI_3	D_1	H	D_T	D_J	n	SW	D_S	S	tot. L	Lb	nom. F_1	max. F_2	nom. M_1	max. M_2
	In				In										Lb		Ft	
SJ-075-.../W	3/4	10	16	-	1.70	0.55	1.19	5/16-24	4	5/32	1.63	0.13	0.68	0.34	16281	21708	9	12
SJ-087-.../W	7/8	9	14	-	1.84	0.60	1.31	5/16-24	6	5/32	1.75	0.13	0.73	0.40	21708	28944	9	12
SJ-100-.../W	1	8	12	14	1.95	0.60	1.44	5/16-24	8	5/32	2.00	0.19	0.79	0.49	21708	28944	9	12
SJ-112-.../W	1-1/8	7	8	12	2.20	0.80	1.65	3/8-24	6	3/16	2.13	0.19	0.99	0.67	30012	40016	15	20
SJ-125-.../W	1-1/4	7	8	12	2.34	0.80	1.78	3/8-24	8	3/16	2.38	0.19	0.99	0.85	30012	40016	15	20
SJ-137-.../W	1-3/8	6	8	12	2.45	0.92	1.90	3/8-24	10	3/16	2.50	0.19	1.11	0.96	37515	50020	15	20
SJ-150-.../W	1-1/2	6	8	12	2.95	1.10	2.20	1/2-20	8	1/4	2.75	0.19	1.29	1.67	56940	75920	37	49
SJ-162-.../W	1-5/8	6	8	12	3.20	1.10	2.33	1/2-20	8	1/4	2.88	0.19	1.29	1.92	71175	94900	37	49
SJ-175-.../W	1-3/4	5	8	12	3.45	1.10	2.45	1/2-20	10	1/4	3.45	0.25	1.35	2.33	85410	113880	37	49
SJ-187-.../W	1-7/8	6	8	12	3.59	1.10	2.58	1/2-20	12	1/4	3.59	0.25	1.35	2.57	85410	113880	37	49
SJ-200-.../W	2	4.5	8	12	3.95	1.30	2.88	5/8-11	8	5/16	3.50	0.25	1.55	3.63	91392	121856	75	99
SJ-225-.../W	2-1/4	4.5	8	12	4.45	1.30	3.13	5/8-11	10	5/16	4.00	0.25	1.55	4.57	137088	182784	75	99
SJ-250-.../W	2-1/2	4	8	12	4.70	1.30	3.38	5/8-11	12	5/16	4.50	0.31	1.61	5.25	137088	182784	75	99
SJ-275-.../W	2-3/4	4	8	12	5.45	1.50	3.80	3/4-10	12	3/8	4.75	0.31	1.81	7.65	165798	221064	119	159
SJ-300-.../W	3	4	6	8	5.95	1.90	4.23	7/8-9	12	1/2	5.25	0.38	2.28	12.55	226260	301680	179	238
SJ-325-.../W	3-1/4	4	6	8	6.20	1.90	4.48	7/8-9	12	1/2	5.50	0.38	2.28	12.10	226260	301680	179	238
SJ-350-.../W	3-1/2	4	6	8	6.45	1.90	4.73	7/8-9	12	1/2	5.75	0.38	2.28	12.72	226260	301680	179	238
SJ-375-.../W	3-3/4	4	6	8	6.70	2.00	4.98	7/8-9	14	1/2	6.00	0.38	2.38	15.02	226260	301680	179	238
SJ-400-.../W	4	4	6	8	6.95	2.00	5.23	7/8-9	12	9/16	6.65	0.38	2.38	15.89	226260	301680	179	238
SJ-425-.../W	4-1/4	4	6	8	7.20	2.30	5.48	7/8-9	14	9/16	6.90	0.38	2.68	16.63	301680	402240	179	238
SJ-450-.../W	4-1/2	4	6	8	7.45	2.30	5.73	7/8-9	14	9/16	7.40	0.38	2.68	19.07	301680	402240	179	238
SJ-475-.../W	4-3/4	4	6	8	7.70	2.30	5.98	7/8-9	16	9/16	7.90	0.38	2.68	20.63	301680	402240	179	238
SJ-500-.../W	5	4	6	8	7.95	2.30	6.23	7/8-9	16	9/16	7.90	0.38	2.68	21.19	301680	402240	179	238
SJ-525-.../W	5-1/4	4	6	8	8.70	2.40	6.65	1-8	16	9/16	8.40	0.50	2.90	28.11	396720	528960	269	358
SJ-550-.../W	5-1/2	4	6	8	8.95	2.40	6.90	1-8	16	9/16	8.40	0.50	2.90	28.75	396720	528960	269	358
SJ-575-.../W	5-3/4	4	6	8	9.20	2.40	7.15	1-8	16	9/16	9.40	0.50	2.90	31.41	396720	528960	269	358
SJ-600-.../W	6	4	6	8	9.45	2.40	7.40	1-8	16	9/16	9.40	0.50	2.90	31.38	396720	528960	269	358

NOTE:

- Maximum values are valid for permanent bolting applications only, including reaction forces.
- Other sizes, thread pitches or threads per inch (TPI) are available on request. Please contact BMG's Fasteners Department for more information.
- The dimensions listed are representative of Superbolt tensioner products. Typical manufacturing tolerances apply (approximately within 1 mm or 1%).

Bolt-Style Tensioners

SUPERBOLT bolt-style tensioners are used in a wide variety of applications where a nut-style tensioner and stud combination does not fit or is not the preferred solution.

Incorporating the Multi-jackbolt Technology into a Bolt:

- It has all of the preload and low torque advantages of the MJT nuts.
- Requires less head diameter and therefore less space than nut-style MJTs.
- Reduces the number of parts versus studs and nuts.
- The small head dimensions can fit into tight countersinks or space restrictions.

Bolt-Style Tensioner

Dimensions for SB8 (bolt-style tensioners) and SB12 (high strength bolt-style tensioners) are available on pages 16 & 18.

Flexnuts

Dimension lists for SX8 and SX12 (high strength) are available on pages 16 & 18.

Flexnuts for Through Hole Applications

For through hole applications, SUPERBOLT has developed the SUPERBOLT Flexnut, which is a reactive nut that has elastic flexibility. A Flexnut has the same advantages as the MJT on the reactive side. Under load, they flex at the bottom and at the top. This helps relieve stress concentrations and increases the life of the stud / bolt. Since flexnuts are reactive nuts, which are to be used opposite our tensioners, they are never torqued directly in order to achieve preload.

Advantages with Superbolt Flexnuts:

- Under load, they ensure an equal load distribution on the thread of the bolt / stud.
- Adds elasticity to the joint.
- Increases the life of the bolt / stud.

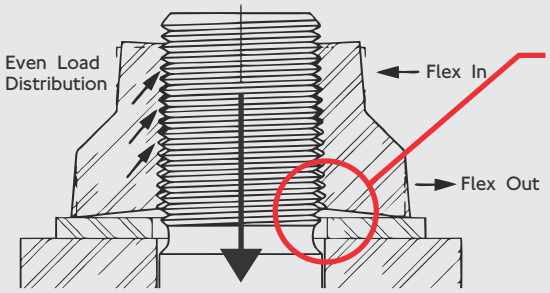

Reduced stress concentrations in the first few threads. The angled face of the nut flattens out after tightening.

(Flexing shown exaggerated)

Load applied by Superbolt tensioner on opposite end.

Split gear segment on a rotary kiln.

PLEASE NOTE: Dimension lists for SX8 and SX12 (high strength) are available on pages 16 & 18.

SB8 SUPERBOLT BOLT-STYLE TENSIONER, STANDARD

Components:

1 - Bolt Body
2 - Jackbolts
3 - Hardened Washer
b = 2 X D
L = Length Information Required

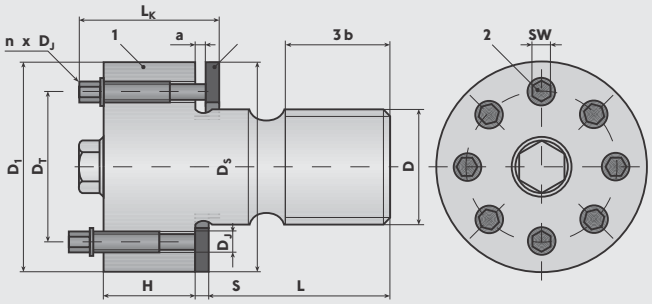

Metric	Size				Nut Body			Jackbolt			Hardened Washer		Height	Weight	Preload Total		Torque per Jackbolt	
Part No.	Thread D	Available Pitch P_1	P_2	P_3	D_1	H	D_T	D_J	n	SW	D_S	S	tot. L	kg	nom. F_1	max. F_2	nom. M_1	max. M_2
	mm				mm										kN		Nm	
SB8-M16x...x.../W	M16	2	1.5	1	31	18	22	M6x0.75	4	5	4	30	3	32	73	94	14	18
SB8-M20x...x.../W	M20	2.5	1.5	1	35	18	26	M6x0.75	6	5	4	35	4	33	109	140	14	18
SB8-M24x...x.../W	M24	3	2	1.5	41	18	30	M6x0.75	8	5	4	41	4	33	146	187	14	18
SB8-M27x...x.../W	M27	3	2	1.5	45	23	35	M8x1	6	6	7	45	5	45	190	250	32	42
SB8-M30x...x.../W	M30	3.5	2	1.5	50	23	38	M8x1	6	6	7	50	5	45	214	286	36	48
SB8-M33x...x.../W	M33	3.5	2	1.5	57	28	43	M10x1.25	6	8	7	57	5	52	285	380	60	80
SB8-M36x...x.../W	M36	4	3	1.5	60	28	46	M10x1.25	6	8	7	60	5	52	333	443	70	93
SB8-M39x...x.../W	M39	4	3	1.5	63	28	49	M10x1.25	8	8	7	63	5	52	406	540	64	85
SB8-M42x...x.../W	M42	4.5	3	1.5	66	28	52	M10x1.25	8	8	7	66	5	52	457	610	72	96
SB8-M45x...x.../W	M45	4.5	3	1.5	75	37	57	M12x1.25	8	10	7	75	6	64	535	720	100	135
SB8-M48x...x.../W	M48	5	3	1.5	78	37	60	M12x1.25	8	10	7	78	6	64	605	800	113	150
SB8-M52x...x.../W	M52	5	3	2	82	37	64	M12x1.25	10	10	7	82	6	64	735	970	110	145
SB8-M56x...x.../W	M56	5.5	4	2	86	37	68	M12x1.25	10	10	7	86	6	64	835	1120	125	167
SB8-M60x...x.../W	M60	5.5	4	2	90	37	72	M12x1.25	12	10	7	90	6	64	985	1310	123	163
SB8-M64x...x.../W	M64	6	4	2	103	46	80	M16x1.5	8	14	10	103	8	83	950	1270	235	315
SB8-M68x...x.../W	M68	6	4	2	107	46	84	M16x1.5	8	14	10	107	8	83	1090	1450	270	360
SB8-M72x...x.../W	M72	6	4	2	111	46	88	M16x1.5	10	14	10	111	8	83	1230	1640	245	325
SB8-M76x...x.../W	M76	6	4	2	116	46	92	M16x1.5	12	14	10	116	8	83	1390	1870	230	310
SB8-M80x...x.../W	M80	6	4	2	120	56	96	M16x1.5	12	14	9	120	8	92	1570	2080	260	345
SB8-M90x...x.../W	M90	6	4	2	130	56	106	M16x1.5	16	14	9	130	8	92	2010	2700	250	335
SB8-M100x...x.../W	M100	6	4	2	148	60	120	M20x1.5	12	17	10	148	10	99	2540	3370	520	690
SB8-M110x...x.../W	M110	6	4	2	158	60	130	M20x1.5	14	17	10	158	10	99	2850	3750	500	660
SB8-M120x...x.../W	M120	6	4	2	170	64	140	M20x1.5	16	17	12	170	10	105	3380	4500	520	690
SB8-M125x...x.../W	M125	6	4	2	175	64	145	M20x1.5	16	17	12	175	10	105	3650	4880	560	750
SB8-M130x...x.../W	M130	6	4	2	180	76	150	M20x1.5	18	17	12	180	10	118	3950	5270	540	720
SB8-M140x...x.../W	M140	6	4	2	190	76	160	M20x1.5	20	17	12	190	10	118	4550	6100	560	750
SB8-M150x...x.../W	M150	6	4	2	200	76	170	M20x1.5	20	17	12	200	10	118	4880	6500	600	800
SB8-M160x...x.../W	M160	6	4	-	210	76	180	M20x1.5	20	17	12	210	10	118	5280	7000	650	860

Imperial	Size				Nut Body			Jackbolt			Hardened Washer		Height	Weight	Preload Total		Torque per Jackbolt	
Part No.	Thread D	Available TPI TPI_1	TPI_2	TPI_3	D_1	H	D_T	D_J	n	SW	D_S	S	tot. L	Lb	nom. F_1	max. F_2	nom. M_1	max. M_2
	In				In										Lb		Ft	
SB8-075-...x.../W	3/4	10	16	-	1.35	.70	1.00	1/4-28	4	3/16	0.24	1.35	0.13	1.38	20400	27200	14	18
SB8-087-...x.../W	7/8	9	14	-	1.48	.70	1.13	1/4-28	6	3/16	0.24	1.48	0.13	1.38	30600	40800	14	18
SB8-100-...x.../W	1	8	12	14	1.59	.70	1.25	1/4-28	8	3/16	0.24	1.59	0.13	1.38	40800	54400	14	18
SB8-112-...x.../W	1-1/8	7	8	12	1.83	.90	1.44	5/16-24	6	1/4	0.23	1.83	0.16	1.68	48600	64800	27	36
SB8-125-...x.../W	1-1/4	7	8	12	1.98	.90	1.56	5/16-24	8	1/4	0.23	1.98	0.16	1.68	64800	86400	27	36
SB8-137-...x.../W	1-3/8	6	8	12	2.23	1.10	1.75	3/8-24	6	5/16	0.25	2.23	0.20	2.03	73800	98400	49	65
SB8-150-...x.../W	1-1/2	6	8	12	2.35	1.10	1.88	3/8-24	8	5/16	0.25	2.35	0.20	2.03	98400	131200	49	65
SB8-162-...x.../W	1-5/8	6	8	12	2.47	1.10	2.00	3/8-24	10	5/16	0.25	2.47	0.20	2.03	123000	164000	49	65
SB8-175-...x.../W	1-3/4	5	8	12	2.73	1.40	2.19	7/16-20	8	3/8	0.30	2.73	0.25	2.49	129600	172800	75	100
SB8-187-...x.../W	1-7/8	6	8	12	2.98	1.45	2.38	1/2-20	8	7/16	0.30	2.98	0.25	2.60	175200	233600	114	152
SB8-200-...x.../W	2	4.5	8	12	3.20	1.45	2.50	1/2-20	8	7/16	0.30	3.20	0.25	2.60	175200	233600	114	152
SB8-225-...x.../W	2-1/4	4.5	8	12	3.45	1.45	2.75	1/2-20	10	7/16	0.30	3.45	0.25	2.60	219000	292000	114	152
SB8-250-...x.../W	2-1/2	4	8	12	3.94	1.80	3.13	5/8-18	8	9/16	0.40	3.94	0.31	3.26	285600	380800	233	310
SB8-275-...x.../W	2-3/4	4	8	12	4.20	1.80	3.38	5/8-18	10	9/16	0.40	4.20	0.31	3.26	357000	476000	233	310
SB8-300-...x.../W	3	4	6	8	4.47	1.80	3.63	5/8-18	12	9/16	0.40	4.45	0.31	3.26	428400	571200	233	310
SB8-325-...x.../W	3-1/4	4	6	8	4.70	2.20	3.88	5/8-18	14	9/16	0.35	4.70	0.31	3.61	499800	666400	233	310
SB8-350-...x.../W	3-1/2	4	6	8	4.95	2.20	4.13	5/8-18	16	9/16	0.35	4.95	0.31	3.61	571200	761600	233	310
SB8-375-...x.../W	3-3/4	4	6	8	5.44	2.35	4.50	3/4-16	14	5/8	0.40	5.44	0.38	4.01	705600	940800	390	520
SB8-400-...x.../W	4	4	6	8	5.70	2.35	4.75	3/4-16	16	5/8	0.40	5.70	0.38	4.01	806400	1075200	390	520
SB8-425-...x.../W	4-1/4	4	6	8	5.94	2.35	5.00	3/4-16	16	5/8	0.40	5.94	0.38	4.01	806400	1075200	390	520
SB8-450-...x.../W	4-1/2	4	6	8	6.22	2.35	5.25	3/4-16	18	5/8	0.40	6.22	0.38	4.01	907200	1209600	390	520
SB8-475-...x.../W	4-3/4	4	6	8	6.44	3.00	5.50	3/4-16	18	5/8	0.50	6.44	0.38	4.76	907200	1209600	390	520
SB8-500-...x.../W	5	4	6	8	6.70	3.00	5.75	3/4-16	20	5/8	0.50	6.70	0.38	4.76	1008000	1344000	390	520
SB8-525-...x.../W	5-1/4	4	6	8	6.94	3.00	6.00	3/4-16	20	5/8	0.50	6.94	0.38	4.76	1008000	1344000	390	520
SB8-550-...x.../W	5-1/2	4	6	8	7.20	3.00	6.25	3/4-16	20	5/8	0.50	7.20	0.38	4.76	1008000	1344000	390	520
SB8-575-...x.../W	5-3/4	4	6	8	7.44	3.00	6.50	3/4-16	20	5/8	0.50	7.44	0.38	4.76	1008000	1344000	390	520
SB8-600-...x.../W	6	4	6	8	7.69	3.00	6.75	3/4-16	20	5/8	0.50	7.69	0.38	4.76	1008000	1344000	390	520

NOTE:

- Maximum values are valid for permanent bolting applications only, including reaction forces.
- Overall weight will vary with length.
- Other sizes, thread pitches or threads per inch (TPI) are available on request. Please contact BMG's Fasteners Department for more information.
- The dimensions listed are representative of Superbolt tensioner products. Typical manufacturing tolerances apply (approximately within 1 mm or 1%).

SB12 SUPERBOLT BOLT-STYLE TENSIONER, HIGH STRENGTH

Components:

1 - Bolt Body
2 - Jackbolts
3 - Hardened Washer
b = 2 X D
L = Length Information Required

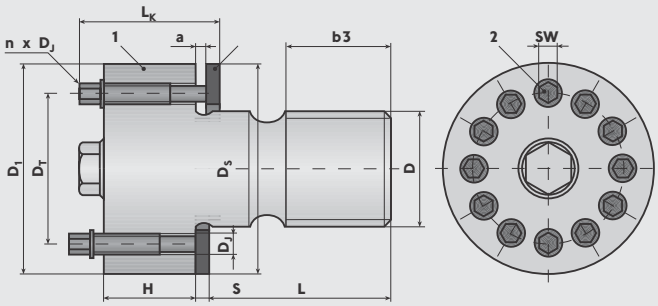

Metric	Size				Nut Body			Jackbolt			Hardened Washer		Height	Weight	Preload Total		Torque per Jackbolt	
Part No.	Thread D	Available Pitch P_1	P_2	P_3	D_1	H	D_T	D_J	n	SW	D_S	S	tot. L	kg	nom. F_1	max. F_2	nom. M_1	max. M_2
	mm				mm										kN		Nm	
SB12-M20x...x.../W	M20	2.5	1.5	1	35	18	26	M6x0.75	8	5	4	35	4	33	146	187	14	18
SB12-M24x...x.../W	M24	3	2	1.5	43	24	32	M8x1	6	6	6	43	4	44	202	268	34	45
SB12-M27x...x.../W	M27	3	2	1.5	47	24	35	M8x1	8	6	6	47	5	45	270	357	34	45
SB12-M30x...x.../W	M30	3.5	2	1.5	50	24	38	M8x1	10	6	6	50	5	45	317	427	32	43
SB12-M33x...x.../W	M33	3.5	2	1.5	57	28	43	M10x1.25	8	8	7	57	5	52	406	539	64	85
SB12-M36x...x.../W	M36	4	3	1.5	60	28	46	M10x1.25	10	8	7	60	5	52	508	675	64	85
SB12-M39x...x.../W	M39	4	3	1.5	63	28	49	M10x1.25	12	8	7	63	5	52	570	760	60	80
SB12-M42x...x.../W	M42	4.5	3	1.5	66	28	52	M10x1.25	12	8	7	66	5	52	645	855	68	90
SB12-M45x...x.../W	M45	4.5	3	1.5	75	37	57	M12x1.25	10	10	7	75	6	64	760	1020	114	152
SB12-M48x...x.../W	M48	5	3	1.5	78	37	60	M12x1.25	10	10	7	78	6	64	855	1140	128	170
SB12-M52x...x.../W	M52	5	3	2	82	37	64	M12x1.25	12	10	7	82	6	64	995	1320	124	165
SB12-M56x...x.../W	M56	5.5	4	2	86	37	68	M12x1.25	12	10	7	86	6	64	995	1320	124	165
SB12-M60x...x.../W	M60	5.5	4	2	90	37	72	M12x1.25	14	10	7	90	6	64	1160	1540	124	165
SB12-M64x...x.../W	M64	6	4	2	103	46	80	M16x1.5	10	14	10	103	8	83	1310	1740	260	345
SB12-M68x...x.../W	M68	6	4	2	107	46	84	M16x1.5	10	14	10	107	8	83	1480	1990	295	395
SB12-M72x...x.../W	M72	6	4	2	111	56	88	M16x1.5	12	14	9	111	8	92	1690	2260	280	375
SB12-M76x...x.../W	M76	6	4	2	116	56	92	M16x1.5	14	14	9	116	8	92	1900	2540	270	360
SB12-M80x...x.../W	M80	6	4	2	120	56	96	M16x1.5	14	14	9	120	8	92	2110	2820	300	400
SB12-M90x...x.../W	M90	6	4	2	139	61	110	M20x1.5	12	17	9	139	10	99	2740	3660	560	750

Imperial	Size				Nut Body			Jackbolt			Hardened Washer		Height	Weight	Preload Total		Torque per Jackbolt	
Part No.	Thread D	Available TPI TPI_1	TPI_2	TPI_3	D_1	H	D_T	D_J	n	SW	D_S	S	tot. L	Lb	nom. F_1	max. F_2	nom. M_1	max. M_2
	In				In										Lb		Ft	
SB12-075-...x.../W	3/4	10	16	-	1.35	.70	1.00	1/4-28	6	3/16	0.24	1.35	0.13	1.38	27180	36240	12	16
SB12-087-...x.../W	7/8	9	14	-	1.48	.70	1.13	1/4-28	8	3/16	0.24	1.48	0.13	1.38	37710	50280	13	17
SB12-100-...x.../W	1	8	12	14	1.73	.90	1.31	5/16-24	6	1/4	0.24	1.73	0.16	1.68	49590	66120	28	37
SB12-112-...x.../W	1-1/8	7	8	12	1.85	.90	1.44	5/16-24	8	1/4	0.23	1.83	0.16	1.68	65520	87360	27	36
SB12-125-...x.../W	1-1/4	7	8	12	1.98	.90	1.56	5/16-24	12	1/4	0.23	1.98	0.16	1.68	83610	111480	23	31
SB12-137-...x.../W	1-3/8	6	8	12	2.23	1.10	1.75	3/8-24	10	5/16	0.25	2.23	0.20	2.03	103950	138600	41	55
SB12-150-...x.../W	1-1/2	6	8	12	2.35	1.10	1.88	3/8-24	12	5/16	0.25	2.35	0.20	2.03	126000	168000	42	55
SB12-162-...x.../W	1-5/8	6	8	12	2.47	1.10	2.00	3/8-24	12	5/16	0.25	2.47	0.20	2.03	151200	201600	50	67
SB12-175-...x.../W	1-3/4	5	8	12	2.73	1.40	2.19	7/16-20	12	3/8	0.30	2.73	0.25	2.49	178200	237600	69	92
SB12-187-...x.../W	1-7/8	6	8	12	2.98	1.50	2.38	1/2-20	10	7/16	0.30	2.98	0.25	2.60	207000	276000	108	144
SB12-200-...x.../W	2	4.5	8	12	3.20	1.50	2.50	1/2-20	12	7/16	0.30	3.20	0.25	2.60	238500	318000	103	138
SB12-225-...x.../W	2-1/4	4.5	8	12	3.45	1.60	2.75	1/2-20	12	7/16	0.30	3.45	0.25	2.85	256500	342000	111	148
SB12-250-...x.../W	2-1/2	4	8	12	3.95	1.80	3.13	5/8-18	10	9/16	0.40	3.94	0.31	3.26	321750	429000	210	279
SB12-275-...x.../W	2-3/4	4	8	12	4.20	2.20	3.38	5/8-18	12	9/16	0.40	4.20	0.31	3.61	394500	526000	214	285
SB12-300-...x.../W	3	4	6	8	4.45	2.20	3.63	5/8-18	14	9/16	0.40	4.45	0.31	3.61	474000	632000	220	294
SB12-325-...x.../W	3-1/4	4	6	8	4.95	2.35	4.00	3/4-16	12	5/8	0.35	4.95	0.38	4.01	561750	749000	362	483
SB12-350-...x.../W	3-1/2	4	6	8	5.20	2.35	4.25	3/4-16	14	5/8	0.35	5.20	0.38	4.01	656250	875000	363	484

NOTE:

- Maximum values are valid for permanent bolting applications only, including reaction forces.
- Overall weight will vary with length.
- Other sizes, thread pitches or threads per inch (TPI) are available on request. Please contact BMG's Fasteners Department for more information.
- The dimensions listed are representative of Superbolt tensioner products. Typical manufacturing tolerances apply (approximately within 1 mm or 1%).

SX8 SUPERBOLT FLEXNUT, STANDARD

Components:

1 - Nut Body

2 - Hardened Washer

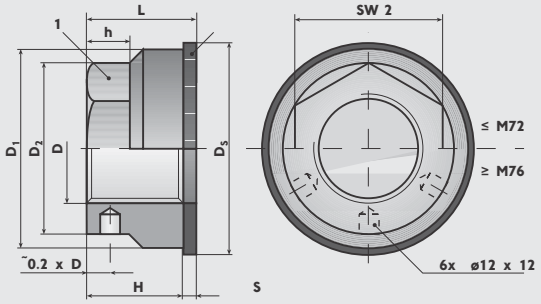

Metric	Size				Nut Body			Jackbolt		Hardened Washer		Height	Weight	Preload Total	
Part No.	Thread D	Available Pitch P_1	P_2	P_3	D_1	H	D_T	H	SW	D_S	S	tot. L	kg	nom. F_1	max. F_2
	mm				mm									kN	
SX8-M20x.../W	M20	2.5	1.5	1	35	17	30	8	27	38	4	21	0.10	110	140
SX8-M24x.../W	M24	3	2	1.5	42	20	37	10	33	45	4	24	0.15	145	187
SX8-M27x.../W	M27	3	2	1.5	47	23	40	11	36	50	5	28	0.20	214	285
SX8-M30x.../W	M30	3.5	2	1.5	52	25	43	12	39	56	5	30	0.25	214	285
SX8-M33x.../W	M33	3.5	2	1.5	57	28	47	13	42	63	6	34	0.40	285	380
SX8-M36x.../W	M36	4	3	1.5	62	31	53	14	48	69	6	37	0.50	343	457
SX8-M39x.../W	M39	4	3	1.5	66	33	56	15	51	72	6	39	0.60	457	610
SX8-M42x.../W	M42	4.5	3	1.5	73	36	62	17	56	76	6	42	0.75	457	610
SX8-M45x.../W	M45	4.5	3	1.5	77	38	64	18	57	81	6	44	0.85	700	935
SX8-M48x.../W	M48	5	3	1.5	83	41	71	19	64	86	6	47	1.10	700	935
SX8-M52x.../W	M52	5	3	2	88	44	74	21	67	94	6	50	1.25	700	935
SX8-M56x.../W	M56	5.5	4	2	97	48	80	22	72	100	6	54	1.60	875	1160
SX8-M60x.../W	M60	5.5	4	2	105	51	84	23	76	110	8	59	2.05	875	1160
SX8-M64x.../W	M64	6	4	2	111	54	88	26	80	120	8	62	2.35	1270	1690
SX8-M72x.../W	M72	6	4	2	125	61	98	29	90	130	8	69	3.15	1270	1690
SX8-M76x.../W	M76	6	4	2	132	64	109	30	–	138	10	74	4.20	1900	2530
SX8-M80x.../W	M80	6	4	2	139	68	120	32	–	145	10	78	5.20	1900	2530
SX8-M90x.../W	M90	6	4	2	156	76	135	36	–	160	10	86	7.10	2530	3380
SX8-M100x.../W	M100	6	4	2	173	85	150	40	–	180	10	95	9.70	2530	3380
SX8-M110x.../W	M110	6	4	2	191	94	165	44	–	202	10	104	13.00	3150	4200
SX8-M120x.../W	M120	6	4	2	208	102	180	48	–	215	12	114	16.75	4200	5600
SX8-M125x.../W	M125	6	4	2	218	108	188	51	–	227	12	120	19.50	4200	5600
SX8-M130x.../W	M130	6	4	2	226	111	195	52	–	234	12	123	21.25	4700	6300
SX8-M140x.../W	M140	6	4	2	243	119	210	56	–	253	12	131	26.25	5250	7000
SX8-M150x.../W	M150	6	4	2	260	127	225	60	–	271	12	139	31.75	5250	7000
SX8-M160x.../W	M160	6	4	2	278	136	240	64	–	290	12	148	38.75	6300	8400

Imperial	Size				Nut Body			Jackbolt		Hardened Washer		Height	Weight	Preload Total	
Part No.	Thread D	Available Pitch TPI_1	TPI_2	P_3	D_1	H	D_T	H	SW	D_S	S	tot. L	Lb	nom. F_1	max. F_2
	In				In									Lb	
SX8-075-.../W	3/4	10	16	-	1.30	0.64	1.11	0.30	1	1.50	0.13	0.77	0.17	20400	27200
SX8-087-.../W	7/8	9	14	-	1.52	0.74	1.25	0.35	1-1/8	1.62	0.13	0.87	0.23	30600	40800
SX8-100-.../W	1	8	12	14	1.73	0.85	1.46	0.40	1-5/16	2.00	0.60	1.01	0.38	48600	64800
SX8-112-.../W	1-1/8	7	8	12	1.95	0.96	1.67	0.45	1-1/2	2.12	0.16	1.12	0.52	48600	64800
SX8-125-.../W	1-1/4	7	8	12	2.17	1.06	1.81	0.50	1-5/8	2.50	0.19	1.25	0.73	64800	86400
SX8-137-.../W	1-3/8	6	8	12	2.38	1.17	1.94	0.55	1-3/4	2.50	0.19	1.36	0.87	73800	98400
SX8-150-.../W	1-1/2	6	8	12	2.60	1.28	2.22	0.60	2	3.00	0.25	1.53	1.33	98400	131200
SX8-162-.../W	1-5/8	6	8	12	2.81	1.38	2.36	0.65	2-1/8	3.00	0.25	1.63	1.54	98400	131200
SX8-175-.../W	1-3/4	5	8	12	3.03	1.49	2.50	0.70	2-1/4	3.25	0.25	1.74	1.85	129600	172800
SX8-187-.../W	1-7/8	6	8	12	3.25	1.59	2.78	0.75	2-1/2	3.50	0.25	1.84	2.54	175200	233600
SX8-200-.../W	2	4.5	8	12	3.46	1.70	2.92	0.80	2-5/8	3.75	0.25	1.95	2.76	175200	233600
SX8-225-.../W	2-1/4	4.5	8	12	3.90	1.91	3.30	0.90	3	4.22	0.31	2.22	4.07	175200	233600
SX8-250-.../W	2-1/2	4	8	12	4.33	2.13	3.55	1.00	3-1/4	4.70	0.31	2.44	5.31	285600	380800
SX8-275-.../W	2-3/4	4	8	12	4.76	2.34	3.93	1.10	3-5/8	4.95	0.31	2.65	7.46	285600	380800
SX8-300-.../W	3	4	6	8	5.23	2.55	4.30	1.20	4	5.45	0.38	2.93	9.18	428400	571200
SX8-325-.../W	3-1/4	4	6	8	5.63	2.76	4.88	1.30	4-1/2	5.95	0.38	3.14	12.08	428400	571200
SX8-350-.../W	3-1/2	4	6	8	6.06	2.98	5.25	1.40	4-7/8	6.45	0.38	3.36	14.98	571200	761600
SX8-375-.../W	3-3/4	4	6	8	6.50	3.19	5.63	1.50	5-1/4	6.94	0.38	3.57	18.36	571200	761600
SX8-400-.../W	4	4	6	8	6.93	3.40	6.00	1.60	5-5/8	7.45	0.43	3.83	22.55	642600	856800
SX8-425-.../W	4-1/4	4	6	8	7.36	3.61	6.38	1.70	5-7/8	7.95	0.43	4.04	28.55	806400	1075200
SX8-450-.../W	4-1/2	4	6	8	7.79	3.83	6.75	1.80	6-1/4	8.20	0.43	4.26	30.98	806400	1075200
SX8-475-.../W	4-3/4	4	6	8	8.23	4.04	7.13	1.90	6-5/8	8.70	0.43	4.47	38.95	907200	1209600
SX8-500-.../W	5	4	6	8	8.66	4.25	7.50	2.00	7	9.45	0.50	4.75	46.80	1008000	1344000
SX8-525-.../W	5-1/4	4	6	8	9.09	4.46	7.88	2.10	7-3/8	9.45	0.50	4.96	52.48	1108800	1478400
SX8-550-.../W	5-1/2	4	6	8	9.53	4.68	8.25	2.20	7-3/4	9.95	0.50	5.18	56.03	1108800	1478400
SX8-575-.../W	5-3/4	4	6	8	9.96	4.89	8.63	2.30	8-1/8	10.45	0.50	5.39	65.49	1209600	1612800
SX8-600-.../W	6	4	6	8	10.39	5.10	9.00	2.40	8-1/2	10.95	0.50	5.60	72.84	1209600	1612800

NOTE:

- Maximum values are valid for permanent bolting applications only, including reaction forces.
- Overall weight will vary with length.
- Other sizes, thread pitches or threads per inch (TPI) are available on request. Please contact BMG's Fasteners Department for more information.
- The dimensions listed are representative of Superbolt tensioner products. Typical manufacturing tolerances apply (approximately within 1 mm or 1%).

SX12 SUPERBOLT FLEXNUT, HIGH STRENGTH

Components:

1 - Nut Body
2 - Hardened Washer

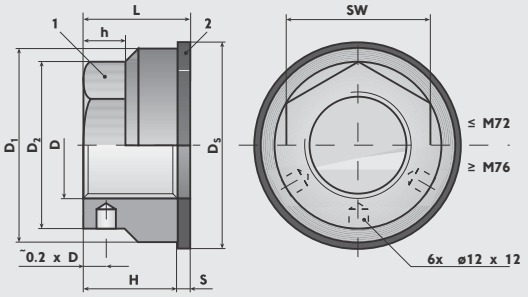

Metric	Size				Nut Body			Jackbolt		Hardened Washer		Height	Weight	Preload Total	
Part No.	Thread D	Available Pitch P_1	P_2	P_3	D_1	H	D_T	H	SW	D_S	S	tot. L	kg	nom. F_1	max. F_2
	mm				mm									kN	
SX12-M20x.../W	M20	2.5	1.5	1	35	20	30	8	27	38	4	24	0.10	145	185
SX12-M24x.../W	M24	3	2	1.5	42	24	37	10	33	45	4	28	0.20	215	285
SX12-M27x.../W	M27	3	2	1.5	47	27	40	11	36	50	5	32	0.25	285	380
SX12-M30x.../W	M30	3.5	2	1.5	52	30	43	12	39	56	5	35	0.35	285	380
SX12-M33x.../W	M33	3.5	2	1.5	57	33	47	13	42	63	6	39	0.45	455	610
SX12-M36x.../W	M36	4	3	1.5	62	36	53	14	48	69	6	42	0.60	455	610
SX12-M39x.../W	M39	4	3	1.5	66	39	56	15	51	72	6	45	0.70	570	760
SX12-M42x.../W	M42	4.5	3	1.5	73	42	62	17	56	76	6	48	0.90	685	915
SX12-M45x.../W	M45	4.5	3	1.5	77	45	64	18	57	81	6	51	1.00	875	1170
SX12-M48x.../W	M48	5	3	1.5	83	48	71	19	64	86	6	54	1.30	875	1170
SX12-M52x.../W	M52	5	3	2	88	52	74	21	67	94	6	58	1.50	1050	1400
SX12-M56x.../W	M56	5.5	4	2	97	56	80	22	72	100	6	62	1.95	1050	1400
SX12-M60x.../W	M60	5.5	4	2	105	60	84	23	76	106	8	68	2.45	1580	2100
SX12-M64x.../W	M64	6	4	2	111	64	88	26	80	120	8	72	2.85	1580	2100
SX12-M72x.../W	M72	6	4	2	125	72	98	29	90	130	8	80	3.90	1900	2530
SX12-M76x.../W	M76	6	4	2	132	76	109	30	–	138	10	86	5.05	2530	3370
SX12-M80x.../W	M80	6	4	2	139	80	120	32	–	145	10	90	6.15	2530	3370
SX12-M90x.../W	M90	6	4	2	156	90	135	36	–	160	10	100	8.50	3150	4200
SX12-M100x.../W	M100	6	4	2	173	100	150	40	–	180	10	110	12.50	3670	4900
SX12-M110x.../W	M110	6	4	2	191	110	165	44	–	202	10	120	15.50	4200	5600
SX12-M120x.../W	M120	6	4	2	208	120	180	48	–	215	12	132	20.00	4700	6300
SX12-M125x.../W	M125	6	4	2	218	125	188	51	–	227	12	137	22.75	4700	6300
SX12-M130x.../W	M130	6	4	2	226	111	195	52	–	234	12	123	21.25	5250	7000
SX12-M140x.../W	M140	6	4	2	243	119	210	56	–	253	12	131	26.25	5750	7700
SX12-M150x.../W	M150	6	4	2	260	127	225	60	–	271	12	139	31.75	5750	7700
SX12-M160x.../W	M160	6	4	-	278	136	240	64	–	290	12	148	38.75	6300	8400

Imperial	Size				Nut Body			Jackbolt		Hardened Washer		Height	Weight	Preload Total	
Part No.	Thread D	Available Pitch TPI_1	TPI_2	P_3	D_1	H	D_T	H	SW	D_S	S	tot. L	Lb	nom. F_1	max. F_2
	In				In									Lb	
SX12-075-.../W	3/4	10	16	-	1.30	0.75	1.11	0.3	1	1.50	0.13	1.01	0.15	30600	40800
SX12-087-.../W	7/8	9	14	-	1.52	0.88	1.25	0.35	1-1/8	1.62	0.13	1.14	0.29	40800	54400
SX12-100-.../W	1	8	12	14	1.73	1.00	1.46	0.4	1-5/16	2.00	0.16	1.32	0.47	48600	64800
SX12-112-.../W	1-1/8	7	8	12	1.95	1.13	1.67	0.45	1-1/2	2.12	0.16	1.45	0.64	64800	86400
SX12-125-.../W	1-1/4	7	8	12	2.17	1.25	1.81	0.5	1-5/8	2.50	0.19	1.44	0.90	73800	98400
SX12-137-.../W	1-3/8	6	8	12	2.38	1.38	1.94	0.55	1-3/4	2.50	0.19	1.76	1.08	98400	131200
SX12-150-.../W	1-1/2	6	8	12	2.60	1.50	2.22	0.6	2	3.00	0.25	2.00	1.59	129600	172800
SX12-162-.../W	1-5/8	6	8	12	2.81	1.63	2.36	0.65	2-1/8	3.00	0.25	2.13	1.90	129600	172800
SX12-175-.../W	1-3/4	5	8	12	3.03	1.75	2.5	0.7	2-1/4	3.25	0.25	2.25	2.28	194400	259200
SX12-187-.../W	1-7/8	6	8	12	3.25	1.88	2.78	0.75	2-1/2	3.50	0.25	2.38	2.91	175200	233600
SX12-200-.../W	2	4.5	8	12	3.46	2.00	2.92	0.8	2-5/8	3.75	0.25	2.50	3.43	262800	350400
SX12-225-.../W	2-1/4	4.5	8	12	3.90	2.25	3.3	0.9	3	4.22	0.31	2.87	5.01	262800	350400
SX12-250-.../W	2-1/2	4	8	12	4.33	2.50	3.55	1	3-1/4	4.70	0.31	3.12	6.51	428400	571200
SX12-275-.../W	2-3/4	4	8	12	4.76	2.75	3.93	1.1	3-5/8	4.95	0.31	3.37	8.42	428400	571200
SX12-300-.../W	3	4	6	8	5.20	3.00	4.3	1.2	4	5.45	0.38	3.76	11.33	571200	761600
SX12-325-.../W	3-1/4	4	6	8	5.63	3.25	4.88	1.3	4-1/2	5.95	0.38	4.01	14.93	571200	761600
SX12-350-.../W	3-1/2	4	6	8	6.06	3.50	5.25	1.4	4-7/8	6.45	0.38	4.26	18.27	642600	856800
SX12-375-.../W	3-3/4	4	6	8	6.50	3.75	5.63	1.5	5-1/4	6.95	0.38	4.51	22.61	642600	856800
SX12-400-.../W	4	4	6	8	6.93	4.00	6	1.6	5-5/8	7.45	0.43	4.86	27.65	714000	952000
SX12-425-.../W	4-1/4	4	6	8	7.36	4.25	6.38	1.7	5-7/8	7.95	0.43	5.11	32.97	907200	1209600
SX12-450-.../W	4-1/2	4	6	8	7.79	4.50	6.75	1.8	6-1/4	8.20	0.43	5.36	38.42	907200	1209600
SX12-475-.../W	4-3/4	4	6	8	8.23	4.75	7.13	1.9	6-5/8	8.70	0.43	5.61	45.09	1008000	1344000
SX12-500-.../W	5	4	6	8	8.66	5.00	7.5	2	7	9.45	0.50	6.00	53.75	1008000	1344000
SX12-525-.../W	5-1/4	4	6	8	9.09	5.25	7.88	2.1	7-3/8	9.45	0.50	6.25	60.81	1108800	1478400
SX12-550-.../W	5-1/2	4	6	8	9.53	5.50	8.25	2.2	7-3/4	9.95	0.50	6.50	69.67	1108800	1478400
SX12-575-.../W	5-3/4	4	6	8	9.96	5.75	8.63	2.3	8-1/8	10.45	0.50	6.75	79.37	1209600	1612800
SX12-600-.../W	6	4	6	8	10.39	6.00	9	2.4	8-1/2	10.95	0.50	7.00	89.75	1209600	1612800

NOTE:

- Maximum values are valid for permanent bolting applications only, including reaction forces.
- Overall weight will vary with length.
- Other sizes, thread pitches or threads per inch (TPI) are available on request. Please contact BMG's Fasteners Department for more information.
- The dimensions listed are representative of Superbolt tensioner products. Typical manufacturing tolerances apply (approximately within 1 mm or 1%).

INSTALLATION - JOINT DESIGN

Stud Bolts

SUPERBOLT nut-style tensioners are used on studs in blind tapped holes. Tightening in pure tension means that the studs won't gall in the tapped hole and can be removed easily.

Through Holes

A common application of double-ended studs use SUPERBOLT nut-style tensioners and a reaction nut (Flexnut) on the other end. Flexnuts add elasticity to the stud, increasing the fatigue-life.

Tapped Holes

SUPERBOLT bolt-style tensioners are often used in blind tapped holes. MJT bolt heads are more compact and easily fit into tighter areas. They also reduce the number of parts needed.

Counter Bores

SUPERBOLT bolt-style tensioners can be provided to completely fit into small counter bores. An internal hex allows for easy tensioner alignment.

Instruction Manual with Every Delivery

SUPERBOLT tensioners are a technologically superior product and are purely mechanical. Simple installation and removal steps ensure the correct assembly and increase safety, speed and service life.

Accessories & Consumables

SUPERBOLT quality accessories and consumables improve both installation and removal, whilst protecting your investment in safe bolted connections. BMG can provide the following products:

- Lubricants
- Protective Caps
- Sockets
- Torque Wrenches
- Pneumatic Wrenches

Installation Support

BMG can provide the following services:

- Staff support through installation training.
- Complete installation of bolted connections.

NOTE: Installations performed by BMG are subject to terms and conditions.

Gas Compression

Applications Include: Crosshead jam nuts, counterweight crosshead jam nuts, couplings, connecting rod nuts, distance pieces, end plates, compressor cylinders, doghouse bolting, piston end nuts and valve jackbolts.

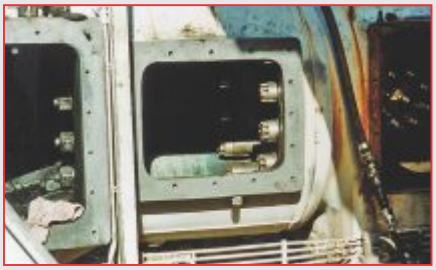

On the above reciprocating compressor's distance piece, BMG's products can be retrofitted in limited space applications. High torque requirements can now be achieved by using small hand-held tools.

Multi-jackbolt tensioners make the installation of pistons easier as only hand tools are required for installation and removal. The reliability of a labyrinth-piston compressor is greatly increased over many years of usage.

52 2" (50,8 mm) tensioners on this centrifugal compressor were tightened by two men in 2 ½ hours. Without the multi-jackbolt tensioners, you require three men working an eight hour shift.

Oil, Gas & Petrochemical

Applications Include: Top drives, flame towers, blowout preventers, mud pumps, fracturing pumps, reactor covers, heat exchanger heads, turbine control valves, turbine joints, pipe flanges, anchor bolts and couplings.

With a 2,500 horsepower rating and a 273,000 lb (1215 kN) rod load, this Weir SPM Destiny™ Fracturing Pump, utilizes Superbolt tensioners to make bolting safer and easier in the field. Only hand tools are needed.

A special multi-jackbolt tensioner series has been developed for the unique needs of the Oil & Gas industry. The washer is joined to the nut body to prevent the loss of the washer. It also assists with corrosion protection against harsh conditions. The special multi-jack tensioner above is being used on a riser clamp.

Removing 11" (279,4 mm) studs from a large Methanol reactor takes 6 hours using SUPERBOLT versus 2 days using Hydraulic tensioners.

Mining

Applications Include: Boom points, ring gears, side frames, hoist motors & pedestal tie-downs, draglines, pinion gears, hoist and drag drums, split gears, bolted segments & excavator bearing caps.

Bolting challenges on the above crusher, included limited space and extreme working conditions. Multi-jackbolt tensioners proved to be the ideal solution. Only 43 lb/ft (58 Nm) of torque were needed on the jackbolts. The equivalent torque on a standard bolt is 2,150 lb / ft (2915 Nm).

Large power shovels have many critical bolting applications. Multi-jackbolt tensioners are used extensively on these machines, all over the world. Seen above are Multi-jackbolt tensioners on a ring gear.

On the above hoist & drag drums, the high preload of 428,400 lb/ft (1906 kN) was achieved with only 233 lb/ft (316 Nm) of torque required on each jackbolt. The added flex from the SUPERBOLT tensioners, more than doubled the elasticity of the bolted connection.

BOLTING SOLUTIONS

Presses

Applications Include: Press columns, tie rods, bearing blocks, high pressure piping, die cushions, cylinder ram bolting and anchor bolts.

Seen above is the world's largest bolt-style multi-jackbolt tensioner. This tensioner has a diameter of 28" and is 40" long (711.2 mm in diameter and 12.2 m long). It was used on a large hydraulic forging press.

Installing 8 Superbolt column nuts required only 12 man hours of installation versus 2½ days for a standard column.

Split-nut thrust collars, a custom designed product from SUPERBOLT, which are much easier to install and remove compared to other large threaded fasteners used on large press columns.

Power Generation

Applications Include: Turbine couplings, stay rods, manway doors, inlet flanges, boiler circulator pump main flange, boiler feed pump head and barrel casing, blade bolts, turbine wheel to shaft bolting, pelton turbine nozzels, servo piston nuts and bearing housings.

Seen above is a flange coupling of a gearbox on a wind turbine. An expansion bolt with integrated SUPERBOLT technology was used to transmit the enormous torque. The solution was also compact and did not add a lot of weight, which was a requirement from the customer.

SUPERBOLT expansion bolts are ideally suited for shaft couplings, as seen in the above Francis type pump / generator shaft coupling, at a pumped-storage facility.

With SUPERBOLT tensioners, joints in awkward positions and confined spaces can be tightened. The Francis wheel has regular maintenance requirements which became manageable by using the Multi-jackbolt tensioner to connect the wheel to the shaft.

Steel Mills

Applications Include: Thrust collars, coupling bolts, tie rod nuts, anchor bolts, mill motors, bearings, shaft mounts, roll tables, BOF and EAF applications, coilers, hydraulic cylinders, cranes, slitter knives, universal joints, back-up roller bearings, work roller bearings and pipe mills.

Thrust collars on bearing chocks create higher preloads compared to previous methods used. Therefore, even the heaviest peakloads can be absorbed. The roll necks are lasting and the production runs smoothly.

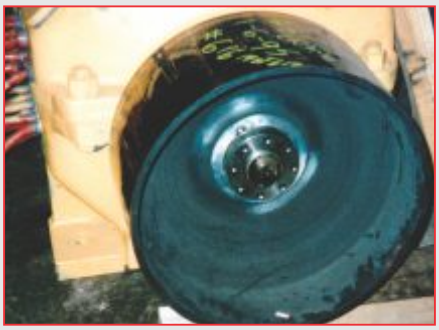

SUPERBOLT mill motor nuts are special jam nuts, designed to fasten brake wheels, couplings and pulleys to mill motors. They are directly interchangeable with nuts supplied by the motor manufacturers.

Seen above is a EAF electrode arm assembly. Using a multi-jackbolt tensioner. A high clamp load was achieved in order to withstand extreme vibration that was acting on the electrode arm.

Other Technologies

BMG's offering consists of several technologies. These include:

Expansion Bolts

By utilizing the SUPERBOLT technology, Nord-Lock is able to offer tremendous radial expansion and joint clamping power in one bolting system. The expansion bolts replace traditional interference or force fit bolts. Radial expansion is critical for rotating couplings or alignment systems, that require the bolts to be able to handle the transfer of forces in the shear.

The split expansion sleeve that mates with the customer's machine holes, along with an internal taper that accepts a mating tapered stud is the key to this technology. The split sleeve allows for larger tolerances on mating parts than is traditionally required with interference fit or hydraulic systems, saving critical machining time.

Expansion bolts are available for blind hole and through hole applications. For more information, please contact BMG's Fasteners Department.

Wedge-locking

Our range of wedge-locking products include washers, wheel nuts and combi bolts.

Customer Specials

SUPERBOLT's Joint Tensioners is highly adaptable to space constraints and environmental conditions that no other bolting systems can match. Contact BMG for any bolting needs.

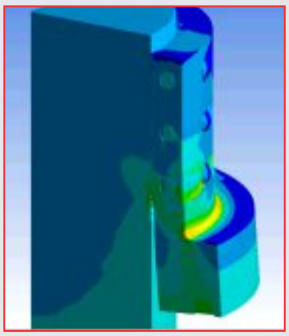

HELPFUL TIPS

Centering of a Washer on a Thread

Make sure that the washer is not resting on one side of the undercuts or the radius of the mating studs.

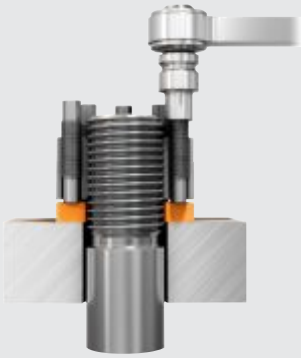

Material with Low Strength

A thicker / larger washer or an additional washer may be required when materials with low strength are used on the joint.

Large or Slotted Holes

An additional, larger washer is necessary to transfer the bolt load to a supported surface.

Space Requirements

Check for space restrictions when using socket and wrench combinations.

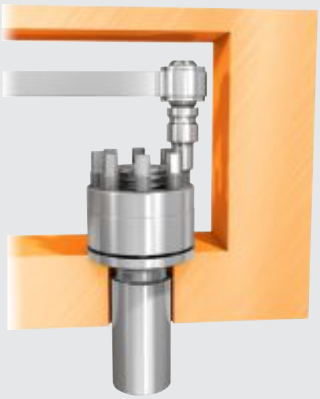

Tensioner at the End of the Stud

An additional distance spacer may be required to bring the tensioner closer to the end of the stud for a proper socket fit.

Very Long Through Stud

A special tensioner with a larger circle of jackbolts may be required to properly access the jackbolts for tightening.

NOTE: If your application corresponds to one or more of the above mentioned design criteria, contact BMG's Fasteners Division and they will help you find the best solution.

Be PART

24 HR TOLL-FREE EMERGENCY
BRANCH HELPLINE:
0800 022 224
WEBSITE:
www.bmgworld.net

BMG

An Invicta Holdings Group Company

BEARINGS • SEALS • POWER TRANSMISSION • DRIVES & MOTORS
MATERIALS HANDLING • FASTENERS & TOOLS • HYDRAULICS
PNEUMATICS • FILTRATION • LUBRICATION • VALVES
TECHNICAL RESOURCES • FIELD SERVICES

BEE4
EMPOWERING SUPPLIER

ISO 9001	Certified
ISO 14001	Certified
ISO 45001	Certified

BMG-FAS08022019 Superbolt